DNP3 Device Profile
Based on DNP XML Schema version 2.11.00

Document Name: SCADAPack 47x RTU DNP3 Master Capabilities XML Device Profile

Document Description: Master Capabilities Device Profile for Schneider Electric SCADAPack 470, SCADAPack 474 RTU (when optionally licensed for DNP3 Data Concentrator Master)

Revision History

Date	Time	Version	Reason for change	Edited by
2019-08-01		1	XML Master Device Profile initial revision	Philip Aubin
2020-12-21		2	1.1.4,1.1.5,1.1.10 updated version information; 1.12.1 documented DNP-SA config method via USB stick or Geo SCADA Expert; 1.12.16 removed unrelated critical fragments	Philip Aubin

REFERENCE DEVICE:

1 Device Properties

This document is intended to be used for several purposes, including:

- Identifying the capabilities of a DNP3 device (Master Station or Outstation)

- Recording the settings of a specific instance of a device (parameter settings for a specific instance of the device in the user's total DNP3 estate)

- Matching user requirements to product capabilities when procuring a DNP3 device

The document is therefore structured to show, for each technical feature, the capabilities of the device (or capabilities required by the device when procuring).

It is also structured to show the current value (or setting) of each of the parameters that describe a specific instance of the device. This "current value" may also show a functional limitation of the device. For example when implementing secure authentication it is not required that all DNP3 devices accept aggressive mode requests during critical exchanges (see Device Profile 1.12.4), in which case a vendor would mark this current value as "No - does not accept aggressive mode requests".

Additionally, the current value may sometimes be used to show a value that a device can achieve because of hardware or software dependencies. Users should note that if an entry in the capabilities column of the Device Profile is grayed-out then there may be information in the current value column that is pertinent to the device's capabilities.

Unless otherwise noted, multiple boxes in the second column below are selected for each parameter to indicate all capabilities supported or required. Parameters without checkboxes in the second column do not have capabilities and are included so that the current value may be shown in the third column.

The items listed in the capabilities column below may be configurable to any of the options selected, or set to a fixed value when the device was designed. Item 1.1.10 contains a list of abbreviations for the possible ways in which the configurable parameters may be set. Since some parameters may not be accessible by each of these methods supported, an abbreviation for the configuration method supported by each parameter is shown in the fourth column of the tables below.

If this document is used to show the current values, the third column should be filled in even if a fixed parameter is selected in the capabilities section ("N/A" may be entered for parameters that are Not Applicable).

If the document is used to show the current values of parameters, then column 3 applies to a single connection between a master and an outstation.

1.1 DEVICE IDENTIFICATION	**Capabilities**	**Current Value**	**If configurable list methods**
1.1.1 Device Function: *Masters send DNP requests,*	◉ Master ○ Outstation	◉ Master ○ Outstation	

while Outstations send DNP responses. If a single physical device can perform both functions, a separate Device Profile Document must be provided for each function.			
1.1.2 Vendor Name: *The name of the organization producing the device.* *Note: The current value of this outstation parameter is available remotely using protocol object Group 0 Variation 252.*		Schneider Electric	
1.1.3 Device Name: *The model and name of the device, sufficient to distinguish it from any other device from the same organization.* *Note: The current value of this outstation parameter is available remotely using protocol object*		SCADAPack 470; SCADAPack 474	

Group 0 Variation 250.			
1.1.4 Device manufacturer's hardware version string: *Note: The current value of this outstation parameter is available remotely using protocol object Group 0 Variation 243.*		5.0	
1.1.5 Device manufacturer's software version string: *Note: The current value of this outstation parameter is available remotely using protocol object Group 0 Variation 242.*		SCADAPack x70 Firmware R2.5.1 (9.5.1)	
1.1.6 Device Profile Document Version Number: *Version of the Device Profile Document is indicated by a whole number incremented with each new release. This should match the latest version shown in the Revision History at the beginning of this document.*		2	

1.1.7 DNP Levels Supported for: *Indicate each DNP3 Level to which the device conforms fully. For Masters, requests and responses can be indicated independently.*	Masters Only Requests Responses ☐ ☐ None ☐ ☐ Level 1 ☑ ☐ Level 2 ☐ ☑ Level 3 ☐ ☐ Level 4	For requests: Level 2 For responses: Level 3	
1.1.8 Supported Function Blocks:	☐ Self Address Support ☐ Data Sets ☐ File Transfer ☐ Virtual Terminal ☐ Mapping to IEC 61850 Object Models defined in a DNP3 XML file ☐ Function code 31, activate configuration ☑ Secure Authentication (if checked then see 1.12)		
1.1.9 Notable Additions: *A brief description intended to quickly identify (for the reader) the most obvious features the device supports in addition to the Highest DNP Level Supported. The complete list of features is described in the Implementation Table.*	Function Code 14 Warm Restart Qualifier 00, 01 Read requests Group 11 Binary Output Events Group 13 Binary Output Command Events Group 22 Var 5 32-bit Counter Change Event with Time Group 22 Var 6 16-bit Counter Change Event with Time Group 41 Analog Output Events Group 42 Analog Output Command Events		
1.1.10 Methods to set Configurable Parameters:	☐ XML - Loaded via DNP3 File Transfer ☐ XML - Loaded via other		

	transport mechanism ☐ Terminal - ASCII Terminal Command Line ☑ Software - Vendor software named SCADAPack x70 RemoteConnect R2.5.1 (3.8.1) ☑ Software - Vendor software named EcoStruxure Geo SCADA Expert 2019 and later ☑ Proprietary file loaded via DNP3 File Transfer ☑ Proprietary file loaded via other transport mechanism ☐ Direct - Keypad on device front panel ☐ Factory - Specified when device is ordered ☐ Protocol - Set via DNP3 (e.g. assign class) ☐ Other - explain:		
1.1.11 DNP3 XML files available On-line: *XML configuration file names that can be read or written through DNP3 File Transfer to a device.* *A device's currently running configuration is returned by DNP3 on-line XML file read from the device.* *DNP3 on-line XML file write to a device will update the device's configuration when the Activate*	RdWrFilename / Description of Contents ☐ dnpDP.xml — Complete Device Profile ☐ dnpDPCap.xml — Device Profile Capabilities ☐ dnpDPCfg.xml — Device Profile config values	Rd Wr Filename ☐ dnpDP.xml ☐ dnpDPCap.xml ☐ dnpDPCfg.xml	

Configuration (function code 31) is received.			
1.1.12 External DNP3 XML files available Off-line: *XML configuration file names that can be read or written from an external system, typically from a system that maintains the outstation configuration.* *External off-line XML file read permits an XML definition of a new configuration to be supplied from off-line configuration tools.* *External off-line XML file write permits an XML definition of a new configuration to be supplied to off-line configuration tools.*	Rd Wr Filename / Description of Contents ☐ ☐ dnpDP.xml — Complete Device Profile ☐ ☐ dnpDPCap.xml — Device Profile Capabilities ☐ ☐ dnpDPCfg.xml — Device Profile config values ☑ ☐ "SCADAPack47xMaster.xml" — Complete Device Profile Document	Rd Wr Filename ☐ ☐ dnpDP.xml ☐ ☐ dnpDPCap.xml ☐ ☐ dnpDPCfg.xml	
1.1.13 Connections Supported:	☑ Serial (complete section 1.2) ☑ IP Networking (complete section 1.3) ☑ Other, explain **USB (RNDIS)**		

1.2 SERIAL CONNECTIONS	**Capabilities**	**Current Value**	**If configurable list methods**

1.2.1 Port Name: *Name used to reference the communications port defined in this section.*		Serial1, Serial2, Serial3, Serial4, Serial5 (Modem)	
1.2.2 Serial Connection Parameters:	☑ Asynchronous - 8 Data Bits, 1 Start Bit, 1 Stop Bit, No Parity ☑ Other, explain **The port can also be configured to use: 8 bits ODD Parity, 8 bits EVEN parity, 8 bits No Parity 2 STOP Bits**		software **SCADAPack x70 RemoteConnect** ----------
1.2.3 Baud Rate:	☐ Fixed at ☐ Configurable, range to ☑ Configurable, selectable from **300**, **600**, **1200**, **2400**, **4800**, **9600**, **19200**, **38400**, **57600**, **115200** ☐ Configurable, other, describe	9600 Note: This is the default setting	software **SCADAPack x70 RemoteConnect** ----------
1.2.4 Hardware Flow Control (Handshaking): *Describe hardware signaling requirements of the interface.* *Where a transmitter or receiver is inhibited until a given control signal is asserted, it is considered to require that signal prior to sending or receiving characters.* *Where a signal is asserted prior to transmitting, that signal will be maintained active until after the end of transmission.* *Where a signal is asserted to enable reception, any data sent to the device when the signal is not active could be discarded.*	☑ None **RS-232 / V.24 / V.28 Options:** Asserts: ☑ RTS Before Tx ☐ DTR Before Tx ☐ RTS Before Rx ☐ DTR Before Rx ☑ Always RTS ☐ Always DTR Requires Before Tx: CTS ☐ Asserted ☐ Deasserted DCD ☐ Asserted ☐ Deasserted DSR ☐ Asserted ☐ Deasserted RI ☐ Asserted ☐ Deasserted ☐ Requires Rx Inactive before Tx Requires Before Rx: CTS ☐ Asserted ☐ Deasserted	None Note: This is the default setting	software **SCADAPack x70 RemoteConnect** ----------

	DCD ☐ Asserted ☐ Deasserted DSR ☐ Asserted ☐ Deasserted RI ☐ Asserted ☐ Deasserted Always Ignores: ☐ CTS ☐ DCD ☑ DSR ☑ RI ☐ Other, explain **RS-485 Options:** ☑ Requires Rx inactive before Tx ☐ Other, explain Note: Hardware Flow Control is configurable on Serial3, Serial4, Serial5 (Modem). See device documentation for available modes Note: RS485 is configurable on Serial1, Serial2, Serial3, Serial4		
1.2.5 Interval to Request Link Status: *Indicates how often to send Data Link Layer status requests on a serial connection. This parameter is separate from the TCP Keep-alive timer.*	☑ Not Supported ☐ Fixed at seconds ☐ Configurable, range to seconds ☐ Configurable, selectable from seconds ☐ Configurable, other, describe	Not Supported	
1.2.6 Supports DNP3 Collision Avoidance: *Indicates whether an Outstation uses a collision avoidance algorithm.*	☑ No ☑ Yes, using Back-off time = (Min + Random) method Minimum Back-off time:	No Note: This is the default setting	software **SCADAPack x70 RemoteConnect** ----------

Collision avoidance may be implemented by a back-off timer with two parameters that define the back-off time range or by some other vendor-specific mechanism. *The recommended back-off time is specified as being a fixed minimum delay plus a random delay, where the random delay has a maximum value specified. This defines a range of delay times that are randomly distributed between the minimum value and the minimum plus the maximum of the random value.* *If a back-off timer is implemented with only a fixed or only a random value, select the Back-off time method and set the parameter that is not supported to "Fixed at 0 ms".*	☐ Fixed at ms ☑ Configurable, range **0** to **65535**ms ☐ Configurable, selectable from ms ☐ Configurable, other, describe Maximum Random Back-off time component: ☐ Fixed at ms ☑ Configurable, range **0** to **65535**ms ☐ Configurable, selectable from ms ☐ Configurable, other, describe ☑ Other, explain **Via the RS232 CTS signal (when configured)**		
1.2.7 Receiver Inter-character Timeout: *When serial interfaces with asynchronous character framing are used, this parameter indicates if the receiver makes a check for gaps between characters. (i.e. extensions of the stop bit time of one character prior to the start bit of the following character within a message). If the receiver performs this check and the timeout is exceeded then the receiver discards the current data link frame. A receiver that does not discard data link frames on*	☑ Not Checked ☐ No gap permitted ☐ Fixed at bit times ☐ Fixed at ms ☐ Configurable, range to bit times ☐ Configurable, range to ms ☐ Configurable, selectable from bit times ☐ Configurable, selectable from ms ☐ Configurable, other, describe ☐ Variable, explain	Not Checked	

the basis of inter-character gaps is considered not to perform this check. *Where no asynchronous serial interface is fitted this parameter is not applicable. In this case none of the options shall be selected.*			
1.2.8 Inter-character gaps in transmission: *When serial interfaces with asynchronous character framing are used, this parameter indicates whether extra delay is ever introduced between characters in the message, and if so, the maximum width of the gap.* *Where no asynchronous serial interface is fitted this parameter is not applicable. In this case none of the options shall be selected.*	☐ None (always transmits with no inter-character gap) ☐ Maximumbit times ☑ Maximum**1**ms	1 ms	

1.3 IP NETWORKING	**Capabilities**	**Current Value**	**If configurable list methods**
1.3.1 Port Name: *Name used to reference the communications port defined in this section.*		Eth1, Eth2, Serial3 (PPP/TCPIP), Serial4 (PPP/TCPIP), Serial5 (PPP/TCPIP)	
1.3.2 Type of End Point:	☑ TCP Initiating ☐ TCP Listening ☑ TCP Dual ☑ UDP Datagram		software **SCADAPack x70 RemoteConnect** ----------
1.3.3 IP Address of this Device:		172.16.1.200	software **SCADAPack x70**

		Note: This is the default setting for Eth1	**RemoteConnect** ----------
1.3.4 Subnet Mask:		255.255.255.0 Note: This is the default setting for Eth1	software **SCADAPack x70 RemoteConnect** ----------
1.3.5 Gateway IP Address:			software **SCADAPack x70 RemoteConnect** ----------
1.3.6 Accepts TCP Connections or UDP Datagrams from:	☑ Allows all (show as *.*.*.* in 1.3.7) ☐ Limits based on IP address ☑ Limits based on list of IP addresses ☐ Limits based on a wildcard IP address ☑ Limits based on list of wildcard IP addresses ☐ Other, explain	Allows all Note: This is the default setting	software **SCADAPack x70 RemoteConnect** ----------
1.3.7 IP Address(es) from which TCP Connections or UDP Datagrams are accepted:		*.*.*.*	
1.3.8 TCP Listen Port Number: *If Outstation or dual end point Master, port number on which to listen for incoming TCP connect requests. Required to be configureable for Masters and recommended to be configurable for Outstations.*	☐ Not Applicable (Master w/o dual end point) ☐ Fixed at 20,000 ☑ Configurable, range **0** to **65535** ☐ Configurable, selectable from ☐ Configurable, other, describe	20000 Note: This is the default setting	software **SCADAPack x70 RemoteConnect** ----------
1.3.9 TCP Listen Port Number of remote device:	☐ Not Applicable (Outstation w/o dual end	20000	software **SCADAPack**

If Master or dual end point Outstation, port number on remote device with which to initiate connection. Required to be configurable for Masters and recommended to be configurable for Outstations.	point) ☐ Fixed at 20,000 ☑ Configurable, range **0** to **65535** ☐ Configurable, selectable from ☐ Configurable, other, describe	Note: This is the default setting	**x70 RemoteConnect** ----------
1.3.10 TCP Keep-alive timer: *The time period for the keep-alive timer on active TCP connections.*	☐ Timer Disabled ☐ Fixed at ms ☑ Configurable, range **0** to **65535000**ms ☐ Configurable, selectable from ms ☐ Configurable, other, describe Note: This is configurable in units of seconds	1150000 ms Note: This is the default setting	software **SCADAPack x70 RemoteConnect** ----------
1.3.11 Local UDP port: *Local UDP port for sending and/or receiving UDP datagrams. Masters may let system choose an available port. Outstations must use one that is known by the Master.*	☐ Fixed at 20,000 ☑ Configurable, range **0** to **65535** ☐ Configurable, selectable from ☐ Configurable, other, describe ☐ Let system choose (Master only)	20000 Note: Same as 1.3.8 Listen Port Setting. This is the default setting	software **SCADAPack x70 RemoteConnect** ----------
1.3.12 Destination UDP port for DNP3 Requests (Masters Only):	☐ Fixed at 20,000 ☑ Configurable, range **0** to **65535** ☐ Configurable, selectable from ☐ Configurable, other, describe	20000 Note: This is the default setting	software **SCADAPack x70 RemoteConnect** ----------
1.3.13 Destination UDP port for initial unsolicited null responses (UDP only Outstations): *The destination UDP port for sending initial unsolicited Null response.*	☐ None ☐ Fixed at 20,000 ☐ Configurable, range to ☐ Configurable, selectable from ☐ Configurable, other, describe Note: Not applicable		

1.3.14 Destination UDP port for responses (UDP only Outstations): *The destination UDP port for sending all responses other than the initial unsolicited Null response.*	☐ None ☐ Fixed at 20,000 ☐ Configurable, range to ☐ Configurable, selectable from ☐ Configurable, other, describe ☐ Use local port number (as specified in 1.3.11) Note: Not applicable		
1.3.15 Multiple outstation connections (Masters only): *Indicates whether multiple outstation connections are supported.*	☑ Supports multiple outstations (Masters only)		
1.3.16 Multiple master connections (Outstations only): *Indicates whether multiple master connections are supported and the method that can be used to establish connections.*	☐ Supports multiple masters (Outstations only) If supported, the following methods may be used: ☐ Method 1 (based on IP address) - required ☐ Method 2 (based on IP port number) - recommended ☐ Method 3 (browsing for static data) - optional Note: Not applicable		
1.3.17 Time synchronization support:	☐ DNP3 LAN procedure (function code 24) ☑ DNP3 Write Time (not recommended over LAN) ☐ Other, explain ☐ Not Supported		

1.4 LINK LAYER	**Capabilities**	**Current Value**	**If configurable list methods**
1.4.1 Data Link Address: *Indicates if the link address is configurable over the entire valid range of 0 to 65,519.*	☐ Fixed at ☑ Configurable, range **0** to **65519** ☐ Configurable,	0 Note: This is the default setting	software **SCADAPack x70 RemoteConnect**

Data link addresses 0xFFF0 through 0xFFFF are reserved for broadcast or other special purposes.	selectable from ☐ Configurable, other, describe		----------
1.4.2 DNP3 Source Address Validation: *Indicates whether the Outstation will filter out requests not from a specific source address.*	☑ Never ☐ Always, one address allowed (shown in 1.4.3) ☐ Always, any one of multiple addresses allowed (each selectable as shown in 1.4.3) ☐ Sometimes, explain	Never	
1.4.3 DNP3 Source Address (es) expected when Validation is Enabled: *Selects the allowed source address(es)*	☐ Configurable to any 16 bit DNP Data Link Address value ☐ Configurable, range to ☐ Configurable, selectable from ☐ Configurable, other, describe Note: Not applicable		
1.4.4 Self Address Support using address 0xFFFC: *If an Outstation receives a message with a destination address of 0xFFFC it shall respond normally with its own source address. It must be possible to diasble this feature if supported.*	☐ Yes (only allowed if configurable) ☑ No	No	
1.4.5 Sends Confirmed User Data Frames: *A list of conditions under which the device transmits confirmed link layer services (TEST_LINK_STATES, RESET_LINK_STATES, CONFIRMED_USER_DATA).*	☑ Never ☑ Always ☑ Sometimes, explain **On multi-frame responses**	Never	software **SCADAPack x70 RemoteConnect** ----------
1.4.6 Data Link Layer Confirmation Timeout:	☑ None ☐ Fixed at ms ☑ Configurable, range	None	software **SCADAPack x70**

This timeout applies to any secondary data link message that requires a confirm or response (link reset, link status, user data, etc).	**0** to **65535000**ms ☐ Configurable, selectable from ms ☐ Configurable, other, describe ☐ Variable, explain Note: This is configurable in units of seconds	Note: This is the default setting	**RemoteConnect** ----------
1.4.7 Maximum Data Link Retries: *The number of times the device will retransmit a frame that requests Link Layer confirmation.*	☑ None ☐ Fixed at ☑ Configurable, range **0** to **65535** ☐ Configurable, selectable from ☐ Configurable, other, describe	None Note: This is the default setting	software **SCADAPack x70 RemoteConnect** ----------
1.4.8 Maximum number of octets Transmitted in a Data Link Frame: *This number includes the CRCs. With a length field of 255, the maximum size would be 292.*	☐ Fixed at ☑ Configurable, range **14** to **292** ☐ Configurable, selectable from ☐ Configurable, other, describe	292 Note: This is the default setting	software **SCADAPack x70 RemoteConnect** ----------
1.4.9 Maximum number of octets that can be Received in a Data Link Frame: *This number includes the CRCs. With a field length of 255, the maximum size would be 292. The device must be able to receive 292 octets to be compliant.*	☑ Fixed at **292** ☐ Configurable, range to ☐ Configurable, selectable from ☐ Configurable, other, describe	292	

1.5 APPLICATION LAYER	**Capabilities**	**Current Value**	**If configurable list methods**
1.5.1 Maximum number of octets Transmitted in an Application Layer Fragment other than File Transfer: *This size does not include any transport or frame*	☐ Fixed at ☑ Configurable, range **1** to **2048** ☐ Configurable, selectable from ☐ Configurable, other, describe	2048 Note: This is the default setting	software **SCADAPack x70 RemoteConnect** ----------

octets. *- Masters must provide a setting less than or equal to 249 to be compliant.* *- Outstations must provide a setting less than or equal to 2048 to be compliant.* *Note: The current value of this outstation parameter is available remotely using protocol object Group 0 Variation 240.*			
1.5.2 Maximum number of octets Transmitted in an Application Layer Fragment containing File Transfer:	☐ Same as 1.5.1 ☐ Fixed at ☐ Configurable, range to ☐ Configurable, selectable from ☐ Configurable, other, describe Note: Not applicable		
1.5.3 Maximum number of octets that can be received in an Application Layer Fragment: *This size does not include any transport or frame octets.* *- Masters must provide a setting greater than or equal to 2048 to be compliant.* *- Outstations must provide a setting greater than or equal to 249 to be compliant.* *Note: The current value of this outstation parameter is available remotely using protocol object Group 0 Variation 241.*	☑ Fixed at **2048** ☐ Configurable, range to ☐ Configurable, selectable from ☐ Configurable, other, describe	2048	
1.5.4 Timeout waiting for Complete Application Layer Fragment:	☐ None ☐ Fixed at ms ☑ Configurable, range **0**	24000ms	software **SCADAPack x70 RemoteConnect**

Timeout if all frames of a message fragment are not received in the specified time. Measured from time first frame of a fragment is received until the last frame is received.	to **65535000**ms ☐ Configurable, selectable from ms ☐ Configurable, other, describe ☐ Variable, explain Note: This is configurable in units of seconds	Note: This is the default setting	----------
1.5.5 Maximum number of objects allowed in a single control request for CROB (Group 12): *Note: The current value of this outstation parameter is available remotely using protocol object Group 0 Variation 216.*	☐ Fixed at (enter 0 if controls are not supported for CROB) ☐ Configurable, range to ☐ Configurable, selectable from ☐ Configurable, other, describe ☐ Variable, explain ☑ The number of objects that can be contained in a fragment (as specified in 1.5.3)	Number of objects in a fragment	
1.5.6 Maximum number of objects allowed in a single control request for Analog Outputs (Group 41):	☐ Fixed at (enter 0 if controls are not supported for Analog Outputs) ☐ Configurable, range to ☐ Configurable, selectable from ☐ Configurable, other, describe ☐ Variable, explain ☑ The number of objects that can be contained in a fragment (as specified in 1.5.3)	Number of objects in a fragment	
1.5.7 Maximum number of objects allowed in a single control request for Data Sets (Groups 85, 86, 87):	☑ Fixed at **0**(enter 0 if controls are not supported for Data Sets) ☐ Configurable, range to ☐ Configurable, selectable from ☐ Configurable, other, describe ☐ Variable, explain ☐ The number of objects that can be contained in a		

	fragment (as specified in 1.5.3)		
1.5.8 Supports mixed object groups (AOBs, CROBs and Data Sets) in the same control request:	☐ Not applicable - controls are not supported ☑ Yes ☐ No	Yes	

1.6 Fill Out The Following Items For Masters Only	**Capabilities**	**Current Value**	**If configurable list methods**
1.6.1 Timeout waiting for Complete Application Layer Responses (ms): *Timeout on Master if all fragments of a response message are not received in the specified time.*	☐ None ☐ Fixed at ms ☑ Configurable, range **0** to **65535000**ms ☐ Configurable, selectable from ms ☐ Configurable, other, describe ☐ Variable, explain Note: This is configurable in units of seconds	24000ms Note: This is the default setting	software **SCADAPack x70 RemoteConnect** ----------
1.6.2 Maximum Application Layer Retries for Request Messages: *The number of times a Master will retransmit an application layer request message if a response is not received. This parameter must never cause a Master to retransmit time sync messages.*	☐ None ☐ Fixed at ☑ Configurable, range **0** to **65535** ☐ Configurable, selectable from ☐ Configurable, other, describe ☐ Variable, explain	1 Note: Configured as Application Layer Attempts. This is the default setting	software **SCADAPack x70 RemoteConnect** ----------
1.6.3 Timeout waiting for First or Next Fragment of an Application Layer Response: *Timeout between a request and the first fragment of a response, or between subsequent fragments of the same response, or between an Application Layer Confirmation and a subsequent fragment.*	☑ None ☐ Fixed at ms ☐ Configurable, range to ms ☐ Configurable, selectable from ms ☐ Configurable, other, describe ☐ Variable, explain		

1.6.4 Issuing controls to off-line devices: *Indicates if the Master issues control requests to devices that are thought to be off-line (i.e. the Master has not seen responses to previous Master requests).*	☐ Not applicable - controls are not supported ☐ Yes ☑ No		
1.6.5 Issuing controls to off-scan devices: *Indicates if the Master issues control requests to devices that are currently off-scan (i.e. the Master has been configured not to issue poll requests to the device).*	☐ Not applicable - controls are not supported ☐ Yes ☑ No		
1.6.6 Maximum Application Layer Retries for Control Select Messages (same sequence number): *Indicates the number of times a Master will retransmit an application layer control select request message if a response is not received - using the same message sequence number.*	☑ None (required) ☐ Fixed at ☐ Configurable, range to ☐ Configurable, selectable from ☐ Configurable, other, describe ☐ Variable, explain		
1.6.7 Maximum Application Layer Retries for Control Select Messages (new sequence number): *Indicates the number of times a Master will retransmit an application layer control select request message if a response is not received - using a new message sequence number.*	☑ None (required) ☐ Fixed at ☐ Configurable, range to ☐ Configurable, selectable from ☐ Configurable, other, describe ☐ Variable, explain		

	Capabilities	**Current Value**	

1.7 FILL OUT THE FOLLOWING ITEMS FOR OUTSTATIONS ONLY			If configurable list methods

1.8 OUTSTATION UNSOLICITED RESPONSE SUPPORT	Capabilities	Current Value	If configurable list methods

1.9 OUTSTATION UNSOLICITED RESPONSE TRIGGER CONDITIONS	Capabilities	Current Value	If configurable list methods

1.10 OUTSTATION PERFORMANCE	Capabilities	Current Value	If configurable list methods

1.11 INDIVIDUAL FIELD OUTSTATION PARAMETERS	Value of Current Setting	If configurable list methods

1.12 SECURITY PARAMETERS	Capabilities	Current Value	If configurable list methods
1.12.1 DNP3 device support for secure authentication: *The support for secure authentication is optional in DNP3 devices. Section 1.1.8 indicates if the device supports secure authentication.* *If the device does not support secure authentication then ignore the rest of this section.* *If the device does support secure authentication then specify the version(s) that are supported in the device. The version number is an integer value defined in the DNP3 Specification. The Secure Authentication procedure defined in IEEE 1815-2010 is version 2. The Secure Authentication procedure defined in IEEE 1815-2012 is version 5.*	Supported version (s): ☑ Fixed at **2** ☐ Configurable, selectable from	Version: 2 Note: Enabled through loading a Security Configuration	software **SCADAPack x70 RemoteConnect** ---------- other (USB memory stick, EcoStruxure Geo SCADA Expert)

1.12.2 Maximum number of users: *The secure authentication algorithm provides support for multiple users. The device must support details for each user (update keys, session keys, etc). A user is identified by a 16-bit user number, allowing a maximum of 65535 users. Devices are not mandated to support this number of potential users. Indicate here the actual limit to the number of simultaneous users that can be supported.*	☑ Fixed at **1 DNP3 Default User (1) supported** ☐ Configurable, range to	Maximum number of users supported: 1	
1.12.3 Security message response timeout: *Authentication of critical messages may involve additional message exchanges (challenges and responses) which can require an extension to the normal DNP3 message response timeout. This timeout specifies an additional time to be used when the extra security transactions are involved. The maximum allowable timeout extension should not exceed 120 seconds.*	☐ Fixed at ms ☑ Configurable, range **0** to **120000**ms ☐ Configurable, selectable from ms ☐Configurable, other, describe	2000 ms Note: This is the default setting	software **SCADAPack x70 RemoteConnect** ----------
1.12.4 Aggressive mode of operation (receive): *DNP3 devices may (optionally) accept "aggressive" mode requests, where challenge data used for authentication is appended to a critical message rather than needing to be solicited via a separate message exchange.*		◉ Yes, accepts aggressive mode requests ○ No, does not accept aggressive mode requests Note: Configurable. This is the default setting	software **SCADAPack x70 Security Administrator** ----------
1.12.5 Aggressive mode of operation (issuing):		○ Yes, issues aggressive	software **SCADAPack**

DNP3 devices must support the issuing of "aggressive" mode of operation, where challenge data used for authentication is appended to a critical message rather than needing to be solicited via a separate message exchange. Specific instances of devices may have the use of aggressive mode switched off.		mode requests ◉ No, does not issue aggressive mode requests Note: Configurable. This is the default setting	**x70 Security Administrator** ----------
1.12.6 Session key change interval: *To counter an attack that compromises the session key, the session key is changed by the master at regular intervals. Outstation devices invalidate the current set of session keys if they have not been changed by the master station after a period of twice this configured value.* *To accommodate systems with infrequent communications, this change interval can be disabled and just the session key change message count used (see 1.12.7)*	☑ Can be disabled When enabled ☑ Configurable, range **1** to **1209600**seconds	Enabled 1800 seconds Note: This is the default setting	software **SCADAPack x70 Security Administrator** ----------
1.12.7 Session key change message count: *In addition to changing the session key at regular intervals, the key shall also be changed after a specified number of messages have been exchanged. The maximum allowable value for this message count is 10,000*	☑ Configurable, range **10** to **60000**	2000 Note: This is the default setting	software **SCADAPack x70 Security Administrator** ----------
1.12.8 Maximum error count (SAv2 only): *To assist in countering denial of service attacks, a DNP3 device shall stop replying with error codes after a number of successive authentication*	☐ Not applicable (not using SAv2) ☑ Configurable, range **0** to **10**	2 Note: This is the default setting	software **SCADAPack x70 Security Administrator** ----------

failures. This error count has a maximum value of 10. Setting the error count to zero inhibits all error messages. *See 1.12.21 for error counts when using SAv5*			
1.12.10 Key-wrap algorithm to encrypt session keys: *During the update of a session key, the key is encrypted using AES-128 or optionally using other algorithms.*	☑ AES-128 ☐ AES-256 ☐ Other, explain:	AES-128	software **SCADAPack x70 Security Administrator** ----------
1.12.11 Cipher Suites used with DNP implementations using TLS: *When TLS is supported, DNP3 Secure Authentication mandates the support of TLS_RSA_WITH_AES_128_SHA. The specification has a number of recommended cipher suite combinations. Indicate the supported Cipher Suites for implementations using TLS.*	☑ Not relevant - TLS is not used ☐ TLS_RSA encrypted with AES128 ☐ TLS_RSA encrypted with RC4_128 ☐ TLS_RSA encrypted with 3DES_EDE_CBC ☐ TLS_DH, signed with DSS, encrypted with 3DES_EDE_CBC ☐ TLS_DH, signed with RSA, encrypted with 3DES_EDE_CBC ☐ TLS_DHE, signed with DSS, encrypted with 3DES_EDE_CBC ☐ TLS_DHE, signed with RSA, encrypted with 3DES_EDE_CBC ☐ TLS_DH, signed with DSS, encrypted with AES128 ☐ TLS_DH, signed with DSS, encrypted with AES256 ☐ TLS_DH		

	encrypted with AES128 ☐ TLS_DH encrypted with AES256 ☐ Other, explain:		
1.12.12 Change cipher request timeout: *Implementations using TLS shall terminate the connection if a response to a change cipher request is not seen within this timeout period.*	☑ Not relevant - TLS is not used ☐ Fixed at ☐ Configurable, range to ☐ Configurable, selectable from ☐ Configurable, other, describe		
1.12.13 Number of Certificate Authorities supported: *Implementations using TLS shall support at least 4 Certificate Authorities. Indicate the number supported.*			
1.12.14 Certificate Revocation check time: *Implementations using TLS shall evaluate Certificate Revocation Lists on a periodic basis, terminating a connection if a certificate is revoked.*	☑ Not relevant - TLS is not used ☐ Fixed at hours ☐ Configurable, range to hours ☐ Configurable, selectable from hours ☐ Configurable, other, describe		
1.12.15 Additional critical function codes: *The DNP3 specification defines those messages with specific function codes that are critical and must be used as part of a secure authentication message exchange. Messages with other function codes are optional and changes to this list should be noted here.* *Note: Secure Authentication version 5 defines additional*	Additional function codes that are to be considered as "critical": ☐ 0 (Confirm) ☐ 1 (Read) ☐ 7 (Immediate freeze) ☐ 8 (Immediate freeze - no ack) ☐ 9 (Freeze-and-clear) ☐ 10 (Freeze-and-clear - no ack)		

functions as critical that were not considered critical in version 2. These are shown in the next column annotated with "V2 only".	☐ 11 (Freeze-at-time) ☐ 12 (Freeze-at-time - no ack) ☐ 22 (Assign Class) ☐ 23 (Delay Measurement) ☐ 25 (Open File) - V2 only ☐ 26 (Close File) - V2 only ☐ 27 (Delete File) - V2 only ☐ 28 (Get File Info) - V2 only ☐ 30 (Abort File) - V2 only ☐ 129 (Response) ☐ 130 (Unsolicited Response)		
1.12.16 Other critical fragments: *Other critical transactions can be defined and should be detailed here. Examples could be based on time (for example: the first transaction after a communications session is established). Other examples could be based on specific data objects (for example: the reading of specific data points).*			

1.13 BROADCAST FUNCTIONALITY	**Capabilities**	**Current Value**	**If configurable list methods**
This section indicates which functions are supported by the device when using broadcast addresses. Note that this section shows only entries that may have a meaningful purpose when used with broadcast requests.			
1.13.1 Support for broadcast functionality:	◉ Disabled ○ Enabled ○ Configurable	Disabled	

2 Mapping to IEC 61850 Object Models

This optional section allows each configuration parameter or point in the DNP Data map to be tied to an attribute in the IEC 61850 object models.

Earlier versions of this section (up to version 2.07) used mappings based on an "access point" (section 2.1.1 and then a series of XPath references (section 2.1.2). Section 2.1.2 has been superseded in version 2.08 onwards with mappings defined using either predefined rules (section 2.1.3) or specified as an equation (section 2.1.4). The list of pre-defined rules is found in the IEEE 1815-1 document.

TREE MPPING BETWEEN DNP3 AND IEC 61850 OBJECTS
2.1.3 Rule based mapping Use this element when mapping to/from iec61850 using one of the predefined rules in IEEE 1815.1 Mapping is bi-directional
This section is not included in this Profile.
2.1.4 Equation based mapping Use this element when mapping to/from iec61850 using an equation to map 0 or more input parameters to a single output parameter. Direction of mapping is determined by the variable on the left hand side of the equation.
This section is not included in this Profile.

3 Capabilities and Current Settings for Device Database (Outstation only)

The following tables identify the capabilities and current settings for each DNP3 data type. Details defining the data points available in the device are shown in part 5 of this Device Profile.

This section is not included in this Master Station Profile.

4 Implementation Table

The following implementation table identifies which object groups and variations, function codes and qualifiers the device supports in both requests and responses. The *Request* columns identify all requests that may be sent by a Master, or all requests that must be parsed by an Outstation. The *Response* columns identify all responses that must be parsed by a Master, or all responses that may be sent by an Outstation.

DNP OBJECT GROUP & VARIATION			REQUEST Master may issue Outstation must parse		RESPONSE Master must parse Outstation may issue	
Object Group Number	**Variation Number**	**Description**	**Function Codes (dec)**	**Qualifier Codes (hex)**	**Function Codes (dec)**	**Qualifier Codes (hex)**
1	0	Binary Input - any variation	1 *(read)*	00, 01 *(start-stop)*		
1	1	Binary Input - Single-bit packed	1 *(read)*	00, 01 *(start-stop)*	*(Response)*	00, 01 *(start-stop)*
1	2	Binary Input - Single-bit with flag	1 *(read)*	00, 01 *(start-stop)*	*(Response)*	00, 01 *(start-stop)*
2	0	Binary Input Change Event - any variation				
2	1	Binary Input Change Event - without time			*(Response)*	17, 28 *(index)*
2	1	Binary Input Change Event - without time			*(Unsol. Resp.)*	17, 28 *(index)*
2	2	Binary Input Change Event - with absolute time			*(Response)*	17, 28 *(index)*
2	2	Binary Input Change Event - with absolute time			*(Unsol. Resp.)*	17, 28 *(index)*
2	3	Binary Input Change Event - with relative time			*(Response)*	17, 28 *(index)*
2	3	Binary Input Change Event - with relative time			*(Unsol. Resp.)*	17, 28 *(index)*
3	0	Double-Bit Binary Input - any variation				
3	1	Double-Bit Binary Input - packed format				
3	2	Double-Bit Binary Input - with flags				

4	0	Double-Bit Binary Input Change Event - any variation				
4	1	Double-Bit Binary Input Change Event - without time				
4	2	Double-Bit Binary Input Change Event - with absolute time				
4	3	Double-Bit Binary Input Change Event - with relative time				
10	0	Continuous Control - any variation	1*(read)*	00, 01 *(start-stop)*		
10	2	Continuous Control - binary output status	1*(read)*	00, 01 *(start-stop)*	*(Response)*	00, 01 *(start-stop)*
11	0	Binary Output Event - any variation				
11	1	Binary Output Event - Status without time			*(Response)*	17, 28 *(index)*
11	1	Binary Output Event - Status without time			*(Unsol. Resp.)*	17, 28 *(index)*
11	2	Binary Output Event - Status with time			*(Response)*	17, 28 *(index)*
11	2	Binary Output Event - Status with time			*(Unsol. Resp.)*	17, 28 *(index)*
12	0	Binary Command - control relay output block (CROB)				
12	1	Binary Command - control relay output block (CROB)	3*(select)*	17, 28 *(index)*	*(Response)*	echo of request
12	1	Binary Command - control relay output block (CROB)	4*(operate)*	17, 28 *(index)*	*(Response)*	echo of request
12	1	Binary Command - control relay output block (CROB)	5*(direct op.)*	17, 28 *(index)*	*(Response)*	echo of request
12	1	Binary Command - control relay output block (CROB)	6*(direct op, no ack)*	17, 28 *(index)*	*(Response)*	echo of request
13	0	Binary Output Command Event - any variation				

13	1	Binary Output Command Event - command status			*(Response)*	17, 28 *(index)*
13	1	Binary Output Command Event - command status			*(Unsol. Resp.)*	17, 28 *(index)*
13	2	Binary Output Command Event - command status with time			*(Response)*	17, 28 *(index)*
13	2	Binary Output Command Event - command status with time			*(Unsol. Resp.)*	17, 28 *(index)*
20	0	Counter - any variation	1 *(read)*	00, 01 *(start-stop)*		
20	1	Counter - 32-bit with flag	1 *(read)*	00, 01 *(start-stop)*	*(Response)*	00, 01 *(start-stop)*
20	2	Counter - 16-bit with flag	1 *(read)*	00, 01 *(start-stop)*	*(Response)*	00, 01 *(start-stop)*
20	5	Counter - 32-bit without flag	1 *(read)*	00, 01 *(start-stop)*	*(Response)*	00, 01 *(start-stop)*
20	6	Counter - 16-bit without flag	1 *(read)*	00, 01 *(start-stop)*	*(Response)*	00, 01 *(start-stop)*
21	0	Frozen Counter - any variation				
21	1	Frozen Counter - 32-bit with flag	1 *(read)*	00, 01 *(start-stop)*	*(Response)*	00, 01 *(start-stop)*
21	1	Frozen Counter - 32-bit with flag			*(Unsol. Resp.)*	00, 01 *(start-stop)*
21	2	Frozen Counter - 16-bit with flag	1 *(read)*	00, 01 *(start-stop)*	*(Response)*	00, 01 *(start-stop)*
21	2	Frozen Counter - 16-bit with flag			*(Unsol. Resp.)*	00, 01 *(start-stop)*
21	5	Frozen Counter - 32-bit with flag and time				
21	6	Frozen Counter - 16-bit with flag and time				
21	9	Frozen Counter - 32-bit without flag	1 *(read)*	00, 01 *(start-stop)*	*(Response)*	00, 01 *(start-stop)*
21	9	Frozen Counter - 32-bit without flag			*(Unsol. Resp.)*	00, 01 *(start-stop)*
21	10	Frozen Counter - 16-bit without flag	1 *(read)*	00, 01 *(start-stop)*	*(Response)*	00, 01 *(start-stop)*
21	10	Frozen Counter - 16-bit without flag			*(Unsol. Resp.)*	00, 01 *(start-stop)*

22	0	Counter Change Event - any variation				
22	1	Counter Change Event - 32-bit with flag			*(Response)*	17, 28 *(index)*
22	1	Counter Change Event - 32-bit with flag			*(Unsol. Resp.)*	17, 28 *(index)*
22	2	Counter Change Event - 16-bit with flag			*(Response)*	17, 28 *(index)*
22	2	Counter Change Event - 16-bit with flag			*(Unsol. Resp.)*	17, 28 *(index)*
22	5	Counter Change Event - 32-bit with flag and time			*(Response)*	17, 28 *(index)*
22	5	Counter Change Event - 32-bit with flag and time			*(Unsol. Resp.)*	17, 28 *(index)*
22	6	Counter Change Event - 16-bit with flag and time			*(Response)*	17, 28 *(index)*
22	6	Counter Change Event - 16-bit with flag and time			*(Unsol. Resp.)*	17, 28 *(index)*
23	0	Frozen Counter Event - any variation				
23	1	Frozen Counter Event - 32-bit with flag				
23	2	Frozen Counter Event - 16-bit with flag				
23	5	Frozen Counter Event - 32-bit with flag and time				
23	6	Frozen Counter Event - 16-bit with flag and time				
30	0	Analog Input - any variation	1 *(read)*	00, 01 *(start-stop)*		
30	1	Analog Input - 32-bit with flag	1 *(read)*	00, 01 *(start-stop)*	*(Response)*	00, 01 *(start-stop)*
30	2	Analog Input - 16-bit with flag	1 *(read)*	00, 01 *(start-stop)*	*(Response)*	00, 01 *(start-stop)*
30	3	Analog Input - 32-bit without flag	1 *(read)*	00, 01 *(start-stop)*	*(Response)*	00, 01 *(start-stop)*
30	4	Analog Input - 16-bit without flag	1 *(read)*	00, 01 *(start-stop)*	*(Response)*	00, 01 *(start-stop)*
30	5	Analog Input - single-precision, floating-point with flag	1 *(read)*	00, 01 *(start-stop)*	*(Response)*	00, 01 *(start-stop)*

32	0	Analog Input Change Event - any variation				
32	1	Analog Input Change Event - 32-bit without time			*(Response)*	17, 28 *(index)*
32	1	Analog Input Change Event - 32-bit without time			*(Unsol. Resp.)*	17, 28 *(index)*
32	2	Analog Input Change Event - 16-bit without time			*(Response)*	17, 28 *(index)*
32	2	Analog Input Change Event - 16-bit without time			*(Unsol. Resp.)*	17, 28 *(index)*
32	3	Analog Input Change Event - 32-bit with time			*(Response)*	17, 28 *(index)*
32	3	Analog Input Change Event - 32-bit with time			*(Unsol. Resp.)*	17, 28 *(index)*
32	4	Analog Input Change Event - 16-bit with time			*(Response)*	17, 28 *(index)*
32	4	Analog Input Change Event - 16-bit with time			*(Unsol. Resp.)*	17, 28 *(index)*
32	5	Analog Input Change Event - single-precision, floating-point without time			*(Response)*	17, 28 *(index)*
32	5	Analog Input Change Event - single-precision, floating-point without time			*(Unsol. Resp.)*	17, 28 *(index)*
32	7	Analog Input Change Event - single-precision, floating-point with time			*(Response)*	17, 28 *(index)*
32	7	Analog Input Change Event - single-precision, floating-point with time			*(Unsol. Resp.)*	17, 28 *(index)*
34	0	Analog Input Deadband - any variation				
34	1	Analog Input Deadband - 16-bit				
34	2	Analog Input Deadband - 32-bit				
34	3					

		Analog Input Deadband - single-precision floating point				
40	0	Analog Output Status - any variation	1*(read)*	00, 01 *(start-stop)*		
40	1	Analog Output Status - 32-bit with flag	1*(read)*	00, 01 *(start-stop)*	*(Response)*	00, 01 *(start-stop)*
40	2	Analog Output Status - 16-bit with flag	1*(read)*	00, 01 *(start-stop)*	*(Response)*	00, 01 *(start-stop)*
40	3	Analog Output Status - single-precision, floating-point with flag	1*(read)*	00, 01 *(start-stop)*	*(Response)*	00, 01 *(start-stop)*
41	0	Analog Output Block - any variation				
41	1	Analog Output Block - 32-bit	3*(select)*	17, 28 *(index)*	*(Response)*	echo of request
41	1	Analog Output Block - 32-bit	4*(operate)*	17, 28 *(index)*	*(Response)*	echo of request
41	1	Analog Output Block - 32-bit	5*(direct op.)*	17, 28 *(index)*	*(Response)*	echo of request
41	1	Analog Output Block - 32-bit	6*(direct op, no ack)*	17, 28 *(index)*	*(Response)*	echo of request
41	2	Analog Output Block - 16-bit	3*(select)*	17, 28 *(index)*	*(Response)*	echo of request
41	2	Analog Output Block - 16-bit	4*(operate)*	17, 28 *(index)*	*(Response)*	echo of request
41	2	Analog Output Block - 16-bit	5*(direct op.)*	17, 28 *(index)*	*(Response)*	echo of request
41	2	Analog Output Block - 16-bit	6*(direct op, no ack)*	17, 28 *(index)*	*(Response)*	echo of request
41	3	Analog Output Block - single-precision, floating-point	3*(select)*	17, 28 *(index)*	*(Response)*	echo of request
41	3	Analog Output Block - single-precision, floating-point	4*(operate)*	17, 28 *(index)*	*(Response)*	echo of request
41	3	Analog Output Block - single-precision, floating-point	5*(direct op.)*	17, 28 *(index)*	*(Response)*	echo of request
41	3	Analog Output Block - single-precision, floating-point	6*(direct op, no ack)*	17, 28 *(index)*	*(Response)*	echo of request

42	0	Analog Output Event - any variation				
42	1	Analog Output Event - 32-bit without time			*(Response)*	17, 28 *(index)*
42	1	Analog Output Event - 32-bit without time			*(Unsol. Resp.)*	17, 28 *(index)*
42	2	Analog Output Event - 16-bit without time			*(Response)*	17, 28 *(index)*
42	2	Analog Output Event - 16-bit without time			*(Unsol. Resp.)*	17, 28 *(index)*
42	3	Analog Output Event - 32-bit with time			*(Response)*	17, 28 *(index)*
42	3	Analog Output Event - 32-bit with time			*(Unsol. Resp.)*	17, 28 *(index)*
42	4	Analog Output Event - 16-bit with time			*(Response)*	17, 28 *(index)*
42	4	Analog Output Event - 16-bit with time			*(Unsol. Resp.)*	17, 28 *(index)*
42	5	Analog Output Event - single-precision floating point without time			*(Response)*	17, 28 *(index)*
42	5	Analog Output Event - single-precision floating point without time			*(Unsol. Resp.)*	17, 28 *(index)*
42	7	Analog Output Event - single-precision floating point with time			*(Response)*	17, 28 *(index)*
42	7	Analog Output Event - single-precision floating point with time			*(Unsol. Resp.)*	17, 28 *(index)*
43	0	Analog Output Command Event - any variation				
43	1	Analog Output Command Event - 32-bit without time			*(Response)*	17, 28 *(index)*
43	1	Analog Output Command Event - 32-bit without time			*(Unsol. Resp.)*	17, 28 *(index)*
43	2	Analog Output Command Event - 16-bit without time			*(Response)*	17, 28 *(index)*
43	2				*(Unsol. Resp.)*	17, 28 *(index)*

		Analog Output Command Event - 16-bit without time				
43	3	Analog Output Command Event - 32-bit with time			*(Response)*	17, 28 *(index)*
43	3	Analog Output Command Event - 32-bit with time			*(Unsol. Resp.)*	17, 28 *(index)*
43	4	Analog Output Command Event - 16-bit with time			*(Response)*	17, 28 *(index)*
43	4	Analog Output Command Event - 16-bit with time			*(Unsol. Resp.)*	17, 28 *(index)*
43	5	Analog Output Command Event - single-precision floating point without time			*(Response)*	17, 28 *(index)*
43	5	Analog Output Command Event - single-precision floating point without time			*(Unsol. Resp.)*	17, 28 *(index)*
43	7	Analog Output Command Event - single-precision floating point with time			*(Response)*	17, 28 *(index)*
43	7	Analog Output Command Event - single-precision floating point with time			*(Unsol. Resp.)*	17, 28 *(index)*
50	1	Time and Date - absolute time	1*(read)*	07 *(limited qty = 1)*	*(Response)*	07 *(limited qty = 1)*
50	1	Time and Date - absolute time	2*(write)*	07 *(limited qty = 1)*		
50	3	Time and Date - absolute time at last recorded time				
51	1	Time and Date CTO - absolute time, synchronised			*(Response)*	07 *(limited qty = 1)*
51	1	Time and Date CTO - absolute time, synchronised			*(Unsol. Resp.)*	07 *(limited qty = 1)*
51	2	Time and Date CTO - absolute time, unsynchronised			*(Response)*	07 *(limited qty = 1)*
51	2	Time and Date CTO - absolute time, unsynchronised			*(Unsol. Resp.)*	07 *(limited qty = 1)*

52	1	Time Delay - coarse			*(Response)*	07 *(limited qty = 1)*
52	2	Time Delay - fine			*(Response)*	07 *(limited qty = 1)*
60	1	Class Objects - class 0 data	1*(read)*	06 *(no range, or all)*		
60	2	Class Objects - class 1 data	1*(read)*	06 *(no range, or all)*		
60	2	Class Objects - class 1 data	20*(enable unsol.)*	06 *(no range, or all)*		
60	2	Class Objects - class 1 data	21*(disable unsol.)*	06 *(no range, or all)*		
60	3	Class Objects - class 2 data	1*(read)*	06 *(no range, or all)*		
60	3	Class Objects - class 2 data	20*(enable unsol.)*	06 *(no range, or all)*		
60	3	Class Objects - class 2 data	21*(disable unsol.)*	06 *(no range, or all)*		
60	4	Class Objects - class 3 data	1*(read)*	06 *(no range, or all)*		
60	4	Class Objects - class 3 data	20*(enable unsol.)*	06 *(no range, or all)*		
60	4	Class Objects - class 3 data	21*(disable unsol.)*	06 *(no range, or all)*		
70	2	File - Authentication (Not Supported)				
70	3	File - Command				
70	4	File - Command Status				
70	5	File - Transport				
70	6	File - Transport Status				
70	7	File - Descriptor				
80	1	Internal Indications - clear IIN1.7 - DEVICE_RESTART	2*(write)*	00 *(start-stop) (Index=7)*		
110		Octet String				

	string length					
112	string length	Virtual Terminal - Output Block				
113	string length	Virtual Terminal - Event Data				
120	1	Authentication Challenge	32*(auth req)*	5B	*(Auth. Resp.)*	5B
120	1	Authentication Challenge			*(Response)*	5B
120	1	Authentication Challenge			*(Unsol. Resp.)*	5B
120	2	Authentication Reply	32*(auth req)*	5B	*(Auth. Resp.)*	5B
120	3	Authentication Aggresive Mode Request	any of 1 to 31	07 *(limited qty = 1)*	*(Response)*	07 *(limited qty = 1)*
120	3	Authentication Aggresive Mode Request			*(Unsol. Resp.)*	07 *(limited qty = 1)*
120	4	Session Key Status Request	32*(auth req)*	07 *(limited qty = 1)*		
120	5	Session Key Status			*(Auth. Resp.)*	5B
120	6	Session Key Change	32*(auth req)*	5B		
120	7	Authentication Error	33*(auth req, no ack)*	07 *(limited qty = 1)*	*(Auth. Resp.)*	5B
120	7	Authentication Error			*(Response)*	5B
120	7	Authentication Error			*(Unsol. Resp.)*	5B
120	9	Hashed Message Authentication Code (HMAC)	any of 1 to 31	5B	*(Response)*	5B
120	9	Hashed Message Authentication Code (HMAC)			*(Unsol. Resp.)*	5B
No object (function code only)			0*(confirm)*			
No object (function code only)			13*(cold restart)*			
No object (function code only)			14*(warm restart)*			
No object (function code only)			23*(delay meas.)*			

5 Data Points List (outstation only)

This part of the Device Profile shows, for each data type, a table defining the data points available in the device or a description of how this information can be obtained if the database is configurable.

This section is not included in this Master Station Profile.

---------- End of Device Profile for Reference Device ----------

---------- End of Complete Device Profile ----------

DNP3 Device Profile
Based on DNP XML Schema version 2.11.00

Document Name: SCADAPack 47x RTU DNP3 Outstation Capabilities XML Device Profile

Document Description: Outstation Capabilities Device Profile for Schneider Electric SCADAPack 470 and SCADAPack 474 RTU

Revision History

Date	Time	Version	Reason for change	Edited by
2019-08-01		1	XML Outstation Device Profile initial revision	Philip Aubin
2020-12-21		2	1.1.4,1.1.5,1.1.10 updated version information; 1.8.3 clarified Unsol Response Confirm Timeout is the same as Application Layer Confirm Timeout; 1.8.4 documented unsol retry burst mode; 1.12.1 documented DNP-SA config method via USB stick or Geo SCADA Expert; 1.12.16 documented firmware modification as critical fragments	Philip Aubin

REFERENCE DEVICE:

1 Device Properties

This document is intended to be used for several purposes, including:

- Identifying the capabilities of a DNP3 device (Master Station or Outstation)

- Recording the settings of a specific instance of a device (parameter settings for a specific instance of the device in the user's total DNP3 estate)

- Matching user requirements to product capabilities when procuring a DNP3 device

The document is therefore structured to show, for each technical feature, the capabilities of the device (or capabilities required by the device when procuring).

It is also structured to show the current value (or setting) of each of the parameters that describe a specific instance of the device. This "current value" may also show a functional limitation of the device. For example when implementing secure authentication it is not required that all DNP3 devices accept aggressive mode requests during critical exchanges (see Device Profile 1.12.4), in which case a vendor would mark this current value as "No - does not accept aggressive mode requests".

Additionally, the current value may sometimes be used to show a value that a device can achieve because of hardware or software dependencies. Users should note that if an entry in the capabilities column of the Device Profile is grayed-out then there may be information in the current value column that is pertinent to the device's capabilities.

Unless otherwise noted, multiple boxes in the second column below are selected for each parameter to indicate all capabilities supported or required. Parameters without checkboxes in the second column do not have capabilities and are included so that the current value may be shown in the third column.

The items listed in the capabilities column below may be configurable to any of the options selected, or set to a fixed value when the device was designed. Item 1.1.10 contains a list of abbreviations for the possible ways in which the configurable parameters may be set. Since some parameters may not be accessible by each of these methods supported, an abbreviation for the configuration method supported by each parameter is shown in the fourth column of the tables below.

If this document is used to show the current values, the third column should be filled in even if a fixed parameter is selected in the capabilities section ("N/A" may be entered for parameters that are Not Applicable).

If the document is used to show the current values of parameters, then column 3 applies to a single connection between a master and an outstation.

1.1 DEVICE IDENTIFICATION	**Capabilities**	**Current Value**	**If configurable list methods**
1.1.1 Device Function:	○ Master ◉ Outstation	○ Master ◉ Outstation	

Masters send DNP requests, while Outstations send DNP responses. If a single physical device can perform both functions, a separate Device Profile Document must be provided for each function.			
1.1.2 Vendor Name: *The name of the organization producing the device.* *Note: The current value of this outstation parameter is available remotely using protocol object Group 0 Variation 252.*		Schneider Electric	
1.1.3 Device Name: *The model and name of the device, sufficient to distinguish it from any other device from the same organization.* *Note: The current value of this outstation parameter is available remotely using*		SCADAPack 470; SCADAPack 474	

protocol object Group 0 Variation 250.			
1.1.4 Device manufacturer's hardware version string: *Note: The current value of this outstation parameter is available remotely using protocol object Group 0 Variation 243.*		5.0	
1.1.5 Device manufacturer's software version string: *Note: The current value of this outstation parameter is available remotely using protocol object Group 0 Variation 242.*		SCADAPack x70 Firmware R2.5.1 (9.5.1)	
1.1.6 Device Profile Document Version Number: *Version of the Device Profile Document is indicated by a whole number incremented with each new release. This should match the latest version shown in the Revision History at the*		2	

beginning of this document.			
1.1.7 DNP Levels Supported for: *Indicate each DNP3 Level to which the device conforms fully. For Masters, requests and responses can be indicated independently.*	Outstations Only Requests and Responses ☐ None ☑ Level 1 ☑ Level 2 ☑ Level 3 ☑ Level 4	Level 4	
1.1.8 Supported Function Blocks:	☐ Self Address Support ☐ Data Sets ☑ File Transfer ☑ Virtual Terminal ☐ Mapping to IEC 61850 Object Models defined in a DNP3 XML file ☑ Function code 31, activate configuration ☑ Secure Authentication (if checked then see 1.12)	File Transfer Virtual Terminal FC31	
1.1.9 Notable Additions: *A brief description intended to quickly identify (for the reader) the most obvious features the device supports in addition to the Highest DNP Level Supported. The complete list of features is described in the Implementation Table.*	Function Code 14 Warm Restart Function Code 15 Initialize Counter Data - Legacy Group 22 Var 5 32-bit Counter Change Event with Time Group 22 Var 6 16-bit Counter Change Event with Time Group 70 Var 2-7 File Transfer Group 112 Virtual Terminal Output Block Group 113 Virtual Terminal Event Data		

1.1.10 Methods to set Configurable Parameters:	☐ XML - Loaded via DNP3 File Transfer ☐ XML - Loaded via other transport mechanism ☐ Terminal - ASCII Terminal Command Line ☑ Software - Vendor software named SCADAPack x70 RemoteConnect R2.5.1 (3.8.1) ☑ Software - Vendor software named EcoStruxure Geo SCADA Expert 2019 and later ☑ Proprietary file loaded via DNP3 File Transfer ☑ Proprietary file loaded via other transport mechanism ☐ Direct - Keypad on device front panel ☐ Factory - Specified when device is ordered ☑ Protocol - Set via DNP3 (e.g. assign class) ☐ Other - explain:		
1.1.11 DNP3 XML files available On-line: *XML configuration file names that can be read or written through DNP3 File Transfer to a device.* *A device's currently running configuration is returned by DNP3 on-line XML file read from the device.* *DNP3 on-line XML file write to a device will update the*	RdWrFilename / Description of Contents ☐ dnpDP.xml — Complete Device Profile ☐ dnpDPCap.xml — Device Profile Capabilities ☑ dnpDPCfg.xml — Device Profile config values	Rd Wr Filename ☐ dnpDP.xml ☐ dnpDPCap.xml ☑ dnpDPCfg.xml	

device's configuration when the Activate Configuration (function code 31) is received.			
1.1.12 External DNP3 XML files available Off-line: *XML configuration file names that can be read or written from an external system, typically from a system that maintains the outstation configuration.* *External off-line XML file read permits an XML definition of a new configuration to be supplied from off-line configuration tools.* *External off-line XML file write permits an XML definition of a new configuration to be supplied to off-line configuration tools.*	Rd Wr Filename / Description of Contents ☐ ☐ dnpDP.xml — Complete Device Profile ☐ ☐ dnpDPCap.xml — Device Profile Capabilities ☐ ☐ dnpDPCfg.xml — Device Profile config values ☑ ☐ "SCADAPack47xSlave.xml" — Complete Device Profile Document	Rd Wr Filename ☐ ☐ dnpDP.xml ☐ ☐ dnpDPCap.xml ☐ ☐ dnpDPCfg.xml	
1.1.13 Connections Supported:	☑ Serial (complete section 1.2) ☑ IP Networking (complete section 1.3) ☑ Other, explain **USB (RNDIS)**		

1.2 SERIAL CONNECTIONS	**Capabilities**	**Current Value**	**If configurable list methods**
1.2.1 Port Name: *Name used to reference the communications port defined in this section.*		Serial1, Serial2, Serial3, Serial4, Serial5 (Modem)	
1.2.2 Serial Connection Parameters:	☑ Asynchronous - 8 Data Bits, 1 Start Bit, 1 Stop Bit, No Parity ☑ Other, explain **The port can also be configured to use: 8 bits ODD Parity, 8 bits EVEN parity, 8 bits No Parity 2 STOP Bits**		software **SCADAPack x70 RemoteConnect** ----------
1.2.3 Baud Rate:	☐ Fixed at ☐ Configurable, range to ☑ Configurable, selectable from **300**, **600**, **1200**, **2400**, **4800**, **9600**, **19200**, **38400**, **57600**, **115200** ☐ Configurable, other, describe	9600 Note: This is the default setting	software **SCADAPack x70 RemoteConnect** ----------
1.2.4 Hardware Flow Control (Handshaking): *Describe hardware signaling requirements of the interface.* *Where a transmitter or receiver is inhibited until a given control signal is asserted, it is considered to require that signal prior to sending or receiving characters.* *Where a signal is asserted prior to transmitting, that signal will be maintained active until after the end of transmission.* *Where a signal is asserted to enable reception, any*	☑ None **RS-232 / V.24 / V.28 Options:** Asserts: ☑ RTS Before Tx ☐ DTR Before Tx ☐ RTS Before Rx ☐ DTR Before Rx ☑ Always RTS ☐ Always DTR Requires Before Tx: CTS ☐ Asserted ☐ Deasserted DCD ☐ Asserted ☐ Deasserted DSR ☐ Asserted ☐ Deasserted RI ☐ Asserted ☐ Deasserted ☐ Requires Rx Inactive before Tx Requires Before Rx:	None Note: This is the default setting	software **SCADAPack x70 RemoteConnect** ----------

data sent to the device when the signal is not active could be discarded.	CTS ☐ Asserted ☐ Deasserted DCD ☐ Asserted ☐ Deasserted DSR ☐ Asserted ☐ Deasserted RI ☐ Asserted ☐ Deasserted Always Ignores: ☐ CTS ☐ DCD ☑ DSR ☑ RI ☐ Other, explain **RS-485 Options:** ☑ Requires Rx inactive before Tx ☐ Other, explain Note: Hardware Flow Control is configurable on Serial3, Serial4, Serial5 (Modem). See device documentation for available modes Note: RS485 is configurable on Serial1, Serial2, Serial3, Serial4		
1.2.5 Interval to Request Link Status: *Indicates how often to send Data Link Layer status requests on a serial connection. This parameter is separate from the TCP Keep-alive timer.*	☑ Not Supported ☐ Fixed at seconds ☐ Configurable, range to seconds ☐ Configurable, selectable from seconds ☐ Configurable, other, describe	Not Supported	
1.2.6 Supports DNP3 Collision Avoidance: *Indicates whether an Outstation uses a collision avoidance algorithm.*	☑ No ☑ Yes, using Back-off time = (Min + Random) method Minimum Back-off	No Note: This is the default setting	software **SCADAPack x70 RemoteConnect** ----------

Collision avoidance may be implemented by a back-off timer with two parameters that define the back-off time range or by some other vendor-specific mechanism. *The recommended back-off time is specified as being a fixed minimum delay plus a random delay, where the random delay has a maximum value specified. This defines a range of delay times that are randomly distributed between the minimum value and the minimum plus the maximum of the random value.* *If a back-off timer is implemented with only a fixed or only a random value, select the Back-off time method and set the parameter that is not supported to "Fixed at 0 ms".*	time: ☐ Fixed at ms ☑ Configurable, range **0** to **65535**ms ☐ Configurable, selectable from ms ☐ Configurable, other, describe Maximum Random Back-off time component: ☐ Fixed at ms ☑ Configurable, range **0** to **65535**ms ☐ Configurable, selectable from ms ☐ Configurable, other, describe ☑ Other, explain **Via the RS232 CTS signal (when configured)**		
1.2.7 Receiver Inter-character Timeout: *When serial interfaces with asynchronous character framing are used, this parameter indicates if the receiver makes a check for gaps between characters. (i.e. extensions of the stop bit time of one character prior to the start bit of the following character within a message). If the receiver performs this check and the timeout is exceeded then the receiver discards the current data link frame. A receiver that does not discard data link frames on*	☑ Not Checked ☐ No gap permitted ☐ Fixed at bit times ☐ Fixed at ms ☐ Configurable, range to bit times ☐ Configurable, range to ms ☐ Configurable, selectable from bit times ☐ Configurable, selectable from ms ☐ Configurable, other, describe ☐ Variable, explain	Not Checked	

the basis of inter-character gaps is considered not to perform this check. *Where no asynchronous serial interface is fitted this parameter is not applicable. In this case none of the options shall be selected.*			
1.2.8 Inter-character gaps in transmission: *When serial interfaces with asynchronous character framing are used, this parameter indicates whether extra delay is ever introduced between characters in the message, and if so, the maximum width of the gap.* *Where no asynchronous serial interface is fitted this parameter is not applicable. In this case none of the options shall be selected.*	☐ None (always transmits with no inter-character gap) ☐ Maximumbit times ☑ Maximum**1**ms	1 ms	

1.3 IP NETWORKING	**Capabilities**	**Current Value**	**If configurable list methods**
1.3.1 Port Name: *Name used to reference the communications port defined in this section.*		Eth1, Eth2, Serial3 (PPP/TCPIP), Serial4 (PPP/TCPIP), Serial 5 (PPP/TCPIP)	
1.3.2 Type of End Point:	☐ TCP Initiating ☑ TCP Listening ☑ TCP Dual ☑ UDP Datagram		software **SCADAPack x70 RemoteConnect** ----------
1.3.3 IP Address of this Device:		172.16.1.200	software **SCADAPack x70**

		Note: This is the default setting for Eth1	**RemoteConnect** ----------
1.3.4 Subnet Mask:		255.255.255.0 Note: This is the default setting for Eth1	software **SCADAPack x70 RemoteConnect** ----------
1.3.5 Gateway IP Address:			software **SCADAPack x70 RemoteConnect** ----------
1.3.6 Accepts TCP Connections or UDP Datagrams from:	☑ Allows all (show as *.*.*.* in 1.3.7) ☐ Limits based on IP address ☑ Limits based on list of IP addresses ☐ Limits based on a wildcard IP address ☑ Limits based on list of wildcard IP addresses ☐ Other, explain	Allows all Note: This is the default setting	software **SCADAPack x70 RemoteConnect** ----------
1.3.7 IP Address(es) from which TCP Connections or UDP Datagrams are accepted:		*.*.*.*	
1.3.8 TCP Listen Port Number: *If Outstation or dual end point Master, port number on which to listen for incoming TCP connect requests. Required to be configureable for Masters and recommended to be configurable for Outstations.*	☐ Not Applicable (Master w/o dual end point) ☐ Fixed at 20,000 ☑ Configurable, range **0** to **65535** ☐ Configurable, selectable from ☐ Configurable, other, describe	20000 Note: This is the default setting	software **SCADAPack x70 RemoteConnect** ----------
1.3.9 TCP Listen Port Number of remote device:	☐ Not Applicable (Outstation w/o dual end	20000	software **SCADAPack**

If Master or dual end point Outstation, port number on remote device with which to initiate connection. Required to be configurable for Masters and recommended to be configurable for Outstations.	point) ☐ Fixed at 20,000 ☑ Configurable, range **0** to **65535** ☐ Configurable, selectable from ☐ Configurable, other, describe	Note: This is the default setting	**x70 RemoteConnect** ----------
1.3.10 TCP Keep-alive timer: *The time period for the keep-alive timer on active TCP connections.*	☐ Timer Disabled ☐ Fixed at ms ☑ Configurable, range **0** to **65535000**ms ☐ Configurable, selectable from ms ☐ Configurable, other, describe Note: This is configurable in units of seconds	1150000 ms Note: This is the default setting	software **SCADAPack x70 RemoteConnect** ----------
1.3.11 Local UDP port: *Local UDP port for sending and/or receiving UDP datagrams. Masters may let system choose an available port. Outstations must use one that is known by the Master.*	☐ Fixed at 20,000 ☑ Configurable, range **0** to **65535** ☐ Configurable, selectable from ☐ Configurable, other, describe ☐ Let system choose (Master only)	20000 Note: Same as 1.3.8 Listen Port Setting. This is the default setting	software **SCADAPack x70 RemoteConnect** ----------
1.3.12 Destination UDP port for DNP3 Requests (Masters Only):	☐ Fixed at 20,000 ☐ Configurable, range to ☐ Configurable, selectable from ☐ Configurable, other, describe Note: Not applicable		
1.3.13 Destination UDP port for initial unsolicited null responses (UDP only Outstations): *The destination UDP port for sending initial unsolicited Null response.*	☐ None ☐ Fixed at 20,000 ☐ Configurable, range to ☐ Configurable, selectable from ☐ Configurable, other, describe		

	Note: Not applicable		
1.3.14 Destination UDP port for responses (UDP only Outstations): *The destination UDP port for sending all responses other than the initial unsolicited Null response.*	☐ None ☐ Fixed at 20,000 ☐ Configurable, range to ☐ Configurable, selectable from ☐ Configurable, other, describe ☐ Use local port number (as specified in 1.3.11) Note: Not applicable		
1.3.15 Multiple outstation connections (Masters only): *Indicates whether multiple outstation connections are supported.*	☐ Supports multiple outstations (Masters only) Note: Not applicable		
1.3.16 Multiple master connections (Outstations only): *Indicates whether multiple master connections are supported and the method that can be used to establish connections.*	☑ Supports multiple masters (Outstations only) If supported, the following methods may be used: ☑ Method 1 (based on IP address) - required ☐ Method 2 (based on IP port number) - recommended ☑ Method 3 (browsing for static data) - optional		software **SCADAPack x70 RemoteConnect** ----------
1.3.17 Time synchronization support:	☑ DNP3 LAN procedure (function code 24) ☑ DNP3 Write Time (not recommended over LAN) ☐ Other, explain ☐ Not Supported		

1.4 LINK LAYER	**Capabilities**	**Current Value**	**If configurable list methods**
1.4.1 Data Link Address: *Indicates if the link address is configurable over the entire valid range of 0 to 65,519.*	☐ Fixed at ☑ Configurable, range **0** to **65519** ☐ Configurable, selectable from	0 Note: This is the default setting	software **SCADAPack x70 RemoteConnect**

Data link addresses 0xFFF0 through 0xFFFF are reserved for broadcast or other special purposes.	☐ Configurable, other, describe		----------
1.4.2 DNP3 Source Address Validation: *Indicates whether the Outstation will filter out requests not from a specific source address.*	☑ Never ☐ Always, one address allowed (shown in 1.4.3) ☐ Always, any one of multiple addresses allowed (each selectable as shown in 1.4.3) ☐ Sometimes, explain	Never	
1.4.3 DNP3 Source Address (es) expected when Validation is Enabled: *Selects the allowed source address(es)*	☐ Configurable to any 16 bit DNP Data Link Address value ☐ Configurable, range to ☐ Configurable, selectable from ☐ Configurable, other, describe Note: Not applicable		
1.4.4 Self Address Support using address 0xFFFC: *If an Outstation receives a message with a destination address of 0xFFFC it shall respond normally with its own source address. It must be possible to diasble this feature if supported.*	☐ Yes (only allowed if configurable) ☑ No	No	
1.4.5 Sends Confirmed User Data Frames: *A list of conditions under which the device transmits confirmed link layer services (TEST_LINK_STATES, RESET_LINK_STATES, CONFIRMED_USER_DATA).*	☑ Never ☑ Always ☑ Sometimes, explain **On multi-frame responses**	Never Note: This is the default setting	software **SCADAPack x70 RemoteConnect** ----------
1.4.6 Data Link Layer Confirmation Timeout:	☑ None ☐ Fixed at ms ☑ Configurable, range	None	software **SCADAPack x70**

This timeout applies to any secondary data link message that requires a confirm or response (link reset, link status, user data, etc).	**0** to **65535000**ms ☐ Configurable, selectable from ms ☐ Configurable, other, describe ☐ Variable, explain Note: This is configurable in units of seconds	Note: This is the default setting	**RemoteConnect** ----------
1.4.7 Maximum Data Link Retries: *The number of times the device will retransmit a frame that requests Link Layer confirmation.*	☑ None ☐ Fixed at ☑ Configurable, range **0** to **65535** ☐ Configurable, selectable from ☐ Configurable, other, describe	None Note: This is the default setting	software **SCADAPack x70 RemoteConnect** ----------
1.4.8 Maximum number of octets Transmitted in a Data Link Frame: *This number includes the CRCs. With a length field of 255, the maximum size would be 292.*	☐ Fixed at ☑ Configurable, range **14** to **292** ☐ Configurable, selectable from ☐ Configurable, other, describe	292 Note: This is the default setting	software **SCADAPack x70 RemoteConnect** ----------
1.4.9 Maximum number of octets that can be Received in a Data Link Frame: *This number includes the CRCs. With a field length of 255, the maximum size would be 292. The device must be able to receive 292 octets to be compliant.*	☑ Fixed at **292** ☐ Configurable, range to ☐ Configurable, selectable from ☐ Configurable, other, describe	292	

1.5 APPLICATION LAYER	**Capabilities**	**Current Value**	**If configurable list methods**
1.5.1 Maximum number of octets Transmitted in an Application Layer Fragment other than File Transfer: *This size does not include any transport or frame*	☐ Fixed at ☑ Configurable, range **1** to **2048** ☐ Configurable, selectable from ☐ Configurable, other, describe	2048 Note: This is the default setting	software **SCADAPack x70 RemoteConnect** ----------

octets. *- Masters must provide a setting less than or equal to 249 to be compliant.* *- Outstations must provide a setting less than or equal to 2048 to be compliant.* *Note: The current value of this outstation parameter is available remotely using protocol object Group 0 Variation 240.*			
1.5.2 Maximum number of octets Transmitted in an Application Layer Fragment containing File Transfer:	☑ Same as 1.5.1 ☐ Fixed at ☐ Configurable, range to ☐ Configurable, selectable from ☐ Configurable, other, describe		
1.5.3 Maximum number of octets that can be received in an Application Layer Fragment: *This size does not include any transport or frame octets.* *- Masters must provide a setting greater than or equal to 2048 to be compliant.* *- Outstations must provide a setting greater than or equal to 249 to be compliant.* *Note: The current value of this outstation parameter is available remotely using protocol object Group 0 Variation 241.*	☑ Fixed at **2048** ☐ Configurable, range to ☐ Configurable, selectable from ☐ Configurable, other, describe	2048	
1.5.4 Timeout waiting for Complete Application Layer Fragment: *Timeout if all frames of a message fragment are not*	☐ None ☐ Fixed at ms ☑ Configurable, range **0** to **65535000**ms ☐ Configurable, selectable	24000ms Note: This is the default setting	software **SCADAPack x70 RemoteConnect** ----------

received in the specified time. Measured from time first frame of a fragment is received until the last frame is received.	from ms ☐ Configurable, other, describe ☐ Variable, explain Note: This is configurable in units of seconds		
1.5.5 Maximum number of objects allowed in a single control request for CROB (Group 12): *Note: The current value of this outstation parameter is available remotely using protocol object Group 0 Variation 216.*	☐ Fixed at (enter 0 if controls are not supported for CROB) ☐ Configurable, range to ☐ Configurable, selectable from ☐ Configurable, other, describe ☐ Variable, explain ☑ The number of objects that can be contained in a fragment (as specified in 1.5.3)	Number of objects in a fragment	
1.5.6 Maximum number of objects allowed in a single control request for Analog Outputs (Group 41):	☐ Fixed at (enter 0 if controls are not supported for Analog Outputs) ☐ Configurable, range to ☐ Configurable, selectable from ☐ Configurable, other, describe ☐ Variable, explain ☑ The number of objects that can be contained in a fragment (as specified in 1.5.3)	Number of objects in a fragment	
1.5.7 Maximum number of objects allowed in a single control request for Data Sets (Groups 85, 86, 87):	☑ Fixed at **0**(enter 0 if controls are not supported for Data Sets) ☐ Configurable, range to ☐ Configurable, selectable from ☐ Configurable, other, describe ☐ Variable, explain ☐ The number of objects that can be contained in a fragment (as specified in 1.5.3)		

1.5.8 Supports mixed object groups (AOBs, CROBs and Data Sets) in the same control request:	☐ Not applicable - controls are not supported ☑ Yes ☐ No	Yes	

1.6 Fill Out The Following Items For Masters Only	**Capabilities**	**Current Value**	**If configurable list methods**

1.7 Fill Out The Following Items For Outstations Only	**Capabilities**	**Current Value**	**If configurable list methods**
1.7.1 Timeout waiting for Application Confirm of solicited response message:	☐ None ☐ Fixed at ms ☑ Configurable, range **0** to **65535000**ms ☐ Configurable, selectable from ms ☐ Configurable, other, describe ☐ Variable, explain Note: This is configurable in units of seconds	24000ms Note: This is the default setting	software **SCADAPack x70 RemoteConnect** ----------
1.7.2 How often is time synchronization required from the master: *Details of when the master needs to perform a time synchronization to ensure that the outstation clock does not drift outside of an acceptable tolerance. If the option to relate this to IIN1.4 is used then details of when IIN1.4 is asserted are in section 1.10.2.*	☐ Never needs time ☑ Within **60** seconds after IIN1.4 is set ☐ Periodically, fixed at seconds ☐ Periodically, between and seconds	Within 60 seconds of IIN1.4	
1.7.3 Device Trouble Bit IIN1.6: *If IIN1.6 device trouble bit is set under certain conditions, explain the possible causes.*	☐ Never used ☑ Reason for setting Note: System Clock alert. Time stamps are reporting from Jan 1, 1970		

	Note: Memory Battery Voltage low. Battery should be replaced		
1.7.4 File Handle Timeout: *If there is no activity referencing a file handle for a configurable length of time, the outstation must do an automatic close on the file. The timeout value must be configurable up to 1 hour. When this condition occurs the outstation will send a File Transport Status Object (obj grp 70 var 6) using a status code value of handle expired (0x02).*	☐ Not applicable, files not supported ☐ Fixed at ms ☑ Configurable, range **5000** to **3600000**ms ☐ Configurable, selectable from ms ☐ Configurable, other, describe ☐ Variable, explain Note: This is configurable in units of seconds	60000 ms Note: This is the default setting	software **SCADAPack x70 RemoteConnect** ----------
1.7.5 Event Buffer Overflow Behavior:	☑ Discard the oldest event ☐ Discard the newest event ☐ Other, explain	Discard oldest	
1.7.6 Event Buffer Organization: *Explain how event buffers are arranged (per Object Group, per Class, single buffer, etc) and specify the number of events that can be buffered.*	☐ Per Object Group (see part 3) ☐ Per Class Class 1: ☐ Fixed at ☐ Configurable, range to ☐ Configurable, selectable from ☐ Configurable, other, describe Class 2: ☐ Fixed at ☐ Configurable, range to ☐ Configurable, selectable from ☐ Configurable, other, describe Class 3:	Single buffer: 5000 Note: This is the default setting	software **SCADAPack x70 RemoteConnect** ----------

	☐ Fixed at ☐ Configurable, range to ☐ Configurable, selectable from ☐ Configurable, other, describe ☑ Single Buffer ☐ Fixed at ☑ Configurable, range **0** to **40000** ☐ Configurable, selectable from ☐ Configurable, other, describe ☐ Other, describe		
1.7.7 Sends Multi-Fragment Responses: *Indicates whether an Outstation sends multi-fragment responses (Masters do not send multi-fragment requests).*	☑ Yes ☐ No	Yes	
1.7.8 Last Fragment Confirmation: *Indicates whether the Outstation requests confirmation of the last fragment of a multi-fragment response.*	☐ Always ☑ Sometimes, explain **Only when it contains events** ☐ Never	Sometimes	
1.7.9 DNP Command Settings preserved through a device restart: *If any of these settings are written through the DNP protocol and they are not preserved through a restart of the Outstation, the Master will have to write them again after it receives a response in which the Restart IIN bit is set.*	☑ Assign Class ☑ Analog Deadbands ☐ Data Set Prototypes ☐ Data Set Descriptors ☑ Function Code 31 Activate Configuration		

1.7.10 Supports configuration signature: *Indicates whether an Outstation supports the Group 0 device attribute "Configuration signature" (variation 200). If yes, list the vendor-defined name(s) of the algorithm(s) available to calculate the signature.* *Note: The algorithm used for calculating the signature is identified by name in a string that can be determined remotely using protocol object Group 0 Variation 201. If only a single algorithm is available, identifying that algorithm in this object is optional.*	☐ Configuration signature supported If configuration signature is supported, then the following algorithm(s) are available for calculating the signature:	Not Supported	
1.7.11 Requests Application Confirmation: *Indicate if application confirmation is requested:* *- when responding with events* *- when sending non-final fragments of multi-fragment responses* *Note: to be compliant both must be selected as "yes".*	For event responses: ◉ Yes ○ No ○ Configurable For non-final fragments: ◉ Yes ○ No ○ Configurable	Event responses: Yes Non-final fragments: Yes	
1.7.12 Supports DNP3 Clock Management: *Indicates whether the Outstation supports the DNP3 clock management functionality:* *- supports timestamped object variations required for its subset level with a*	☑ Yes ☐ No	Yes	

time accuracy that is consistent with section 10 of this Device Profile *- if the outstation asserts IIN1.4 [NEED_TIME], it shall support DNP3 time synchronization functionality*			

1.8 OUTSTATION UNSOLICITED RESPONSE SUPPORT	**Capabilities**	**Current Value**	**If configurable list methods**
1.8.1 Supports Unsolicited Reporting: *When the unsolicited response mode is configured "off", the device is to behave exactly like an equivalent device that has no support for unsolicited responses. If set to "on", the Outstation will send a null Unsolicited Response after it restarts, then wait for an Enable Unsolicited Response command from the master before sending additional Unsolicited Responses containing event data.*	☐ Yes ☐ No ☑ Configurable, selectable from On and Off	Off Note: This is the default setting	software **SCADAPack x70 RemoteConnect** ----------
1.8.2 Master Data Link Address: *The destination address of the master device where the unsolicited responses will be sent.*	☐ Fixed at ☑ Configurable, range **0** to **65519** ☐ Configurable, selectable from ☐ Configurable, other, describe	30000 Note: This is the default setting	software **SCADAPack x70 RemoteConnect** ----------
1.8.3 Unsolicited Response Confirmation Timeout: *This is the amount of time that the outstation will wait for an Application Layer confirmation back from the master indicating that the*	☐ Fixed at ms ☑ Configurable, range **1000** to **65535000**ms ☐ Configurable, selectable from ms ☐ Configurable, other, describe ☐ Variable, explain	16000 ms Note: This is the default setting	software **SCADAPack x70 RemoteConnect** ----------

master received the unsolicited response message. As a minimum, the range of configurable values must include times from one second to one minute. This parameter may be the same one that is used for normal, solicited, application confirmation timeouts, or it may be a separate parameter.	Note: Configurable in units of seconds Note: same as Connection to Master Station > Event Transmission Setup - Application Layer Confirm Timeout		
1.8.4 Number of Unsolicited Retries: *This is the number of retries that an outstation transmits in each unsolicited response series if it does not receive confirmation back from the master. The configured value includes identical and regenerated retry messages. One of the choices must provide for an indefinite (and potentially infinite) number of transmissions.*	☐ None ☐ Fixed at ☐ Configurable, range to ☐ Configurable, selectable from ☑ Configurable, other, describe **- repeating pattern of Unsolicited Attempts per burst (separated by Application Layer Confirm Timeout) followed by Quiet Time Delay** ☑ Unlimited	Unlimited	

1.9 OUTSTATION UNSOLICITED RESPONSE TRIGGER CONDITIONS	**Capabilities**	**Current Value**	**If configurable list methods**
1.9.1 Number of class 1 events:	☑ Class 1 not used to trigger Unsolicited Responses ☐ Fixed at ☑ Configurable, range **0** to **65535** ☐ Configurable, selectable from ☐ Configurable, other, describe Note: Configuring the number to 0 stops class 1	250 Note: This is the default setting	software **SCADAPack x70 RemoteConnect** ----------

	events being used as a trigger		
1.9.2 Number of class 2 events:	☑ Class 2 not used to trigger Unsolicited Responses ☐ Fixed at ☑ Configurable, range **0** to **65535** ☐ Configurable, selectable from ☐ Configurable, other, describe Note: Configuring the number to 0 stops class 2 events being used as a trigger	250 Note: This is the default setting	software **SCADAPack x70 RemoteConnect** ----------
1.9.3 Number of class 3 events:	☑ Class 3 not used to trigger Unsolicited Responses ☐ Fixed at ☑ Configurable, range **0** to **65535** ☐ Configurable, selectable from ☐ Configurable, other, describe Note: Configuring the number to 0 stops class 3 events being used as a trigger	250 Note: This is the default setting	software **SCADAPack x70 RemoteConnect** ----------
1.9.4 Total number of events from any class:	☑ Total Number of Events not used to trigger Unsolicited Responses ☐ Fixed at ☐ Configurable, range to ☐ Configurable, selectable from ☐ Configurable, other, describe		
1.9.5 Hold time after class 1 event:	☑ Class 1 not used to trigger Unsolicited Responses ☐ Fixed at ms		

A value of 0 indicates that responses are not delayed due to this parameter.	☐ Configurable, range to ms ☐ Configurable, selectable from ms ☐ Configurable, other, describe ☐ Use value specified in section 1.9.8		
1.9.6 Hold time after class 2 event: *A value of 0 indicates that responses are not delayed due to this parameter.*	☑ Class 2 not used to trigger Unsolicited Responses ☐ Fixed at ms ☐ Configurable, range to ms ☐ Configurable, selectable from ms ☐ Configurable, other, describe ☐ Use value specified in section 1.9.8		
1.9.7 Hold time after class 3 event: *A value of 0 indicates that responses are not delayed due to this parameter.*	☑ Class 3 not used to trigger Unsolicited Responses ☐ Fixed at ms ☐ Configurable, range to ms ☐ Configurable, selectable from ms ☐ Configurable, other, describe ☐ Use value specified in section 1.9.8		
1.9.8 Hold time after event assigned to any class: *A value of 0 indicates that responses are not delayed due to this parameter.*	☐ Class events not used to trigger Unsolicited Responses ☐ Fixed at ms ☑ Configurable, range **0** to **65535000**ms ☐ Configurable, selectable from ms ☐ Configurable, other, describe Note: This is configurable in units of seconds	10000 ms Note: This is the default setting	software **SCADAPack x70 RemoteConnect** ----------

1.9.9 Retrigger Hold Time: *The hold-time timer may be retriggered for each new event detected (increased possibility of capturing all the changes in a single response) or not retriggered (giving the master a guaranteed update time).*	☐ Hold-time timer will be retriggered for each new event detected (may get more changes in next response) ☑ Hold-time timer will not be retriggered for each new event detected (guaranteed update time)	Not retriggered	
1.9.10 Other Unsolicited Response Trigger Conditions:	☑ **There is a delay inserted between consecutive unsolicited responses** Note: This is configured by the "Minimum Unsolicited Event Tx Delay" parameter (secs)	Note: 30 seconds (default setting)	software **SCADAPack x70 RemoteConnect** ----------

1.10 OUTSTATION PERFORMANCE	**Capabilities**	**Current Value**	**If configurable list methods**
1.10.1 Maximum Time Base Drift (milliseconds per minute): *If the device is synchronized by DNP, what is the clock drift rate over the full operating temperature range.*	☐ Fixed at ms ☑ Range **-0.4** to **+0.4**ms ☐ Selectable from ms ☐ Other, describe		
1.10.2 When does outstation set IIN1.4: *When does the outstation set the internal indication IIN1.4 NEED_TIME*	☐ Never ☑ Asserted at startup until first Time Synchronization request received ☐ Periodically every seconds ☑ Periodically, range **60** to **3932100** seconds ☐ Periodically, selectable from seconds ☐ seconds after last time sync ☐ Range to seconds after last time sync	Periodically every 86400 seconds Note: This is the default setting	software **SCADAPack x70 RemoteConnect** ----------

	☐ Selectable from seconds after last time sync ☐ When time error may have drifted by ms ☐ When time error may have drifted by range to ms ☐ When time error may have drifted by selectable from ms Note: This is configurable in units of minutes		
1.10.3 Maximum Internal Time Reference Error when set via DNP (ms): *The difference between the time set in DNP Write Time message, and the time actually set in the outstation.*	☐ Fixed at ms ☑ Range **-30** to **+30**ms ☐ Selectable from ms ☐ Other, describe		
1.10.4 Maximum Delay Measurement Error (ms): *The difference between the time reported in the delay measurement response and the actual time between receipt of the delay measurement request and issuing the delay measurement reply.*	☐ Fixed at ms ☑ Range **0** to **30**ms ☐ Selectable from ms ☐ Other, describe		
1.10.5 Maximum Response Time (ms): *The amount of time an outstation will take to respond upon receipt of a valid request. This does not include the message transmission time.*	☐ Fixed at ms ☑ Range **10** to **50**ms ☐ Selectable from ms ☐ Other, describe		
1.10.6 Maximum time from start-up to IIN 1.4 assertion (ms):	☐ Fixed at ms ☑ Range **1000** to **30000**ms ☐ Selectable from ms ☐ Other, describe		

1.10.7 Maximum Event Time-tag error for local Binary and Double Bit I/O (ms): *The error between the time-tag reported and the absolute time of the physical event. This error includes the Internal Time Reference Error.* *Note: The current value of this parameter is available remotely using protocol object Group 0 Variation 217.*	☑ Fixed at **10**ms ☐ Range to ms ☐ Selectable from ms ☐ Other, describe		
1.10.8 Maximum Event Time-tag error for local I/O other than Binary and Double Bit data types (ms):	☑ Fixed at **30**ms ☐ Range to ms ☐ Selectable from ms ☐ Other, describe		

1.11 INDIVIDUAL FIELD OUTSTATION PARAMETERS	**Value of Current Setting**	**If configurable list methods**
1.11.1 User-assigned location name or code string (same as g0v245):		software **SCADAPack x70 RemoteConnect** ---------- protocol ----------
1.11.2 User-assigned ID code/number string (same as g0v246):		software **SCADAPack x70 RemoteConnect** ---------- protocol ----------
1.11.3 User-assigned name string for the outstation (same as g0v247):		software **SCADAPack x70 RemoteConnect** ---------- protocol

		----------
1.11.4 Device serial number string (same as g0v248):		factory ----------

1.12 SECURITY PARAMETERS	**Capabilities**	**Current Value**	**If configurable list methods**
1.12.1 DNP3 device support for secure authentication: *The support for secure authentication is optional in DNP3 devices. Section 1.1.8 indicates if the device supports secure authentication.* *If the device does not support secure authentication then ignore the rest of this section.* *If the device does support secure authentication then specify the version(s) that are supported in the device. The version number is an integer value defined in the DNP3 Specification. The Secure Authentication procedure defined in IEEE 1815-2010 is version 2. The Secure Authentication procedure defined in IEEE 1815-2012 is version 5.*	Supported version (s): ☑ Fixed at **2** ☐ Configurable, selectable from	Version: 2 Note: Enabled through loading a Security Configuration	software **SCADAPack x70 RemoteConnect** ---------- other (USB memory stick, EcoStruxure Geo SCADA Expert)
1.12.2 Maximum number of users: *The secure authentication algorithm provides support for multiple users. The device must support details for each user (update keys, session keys, etc). A user is identified by a 16-bit user number, allowing a maximum of 65535 users. Devices are not mandated to support this number of potential users. Indicate here the actual limit to the number of simultaneous users that can be supported.*	☑ Fixed at **1 DNP3 Default User (1) supported** ☐ Configurable, range to	Maximum number of users supported: 1	

1.12.3 Security message response timeout: *Authentication of critical messages may involve additional message exchanges (challenges and responses) which can require an extension to the normal DNP3 message response timeout. This timeout specifies an additional time to be used when the extra security transactions are involved. The maximum allowable timeout extension should not exceed 120 seconds.*	☐ Fixed at ms ☑ Configurable, range **0** to **120000**ms ☐ Configurable, selectable from ms ☐ Configurable, other, describe	2000 ms Note: This is the default setting	software **SCADAPack x70 RemoteConnect** ----------
1.12.4 Aggressive mode of operation (receive): *DNP3 devices may (optionally) accept "aggressive" mode requests, where challenge data used for authentication is appended to a critical message rather than needing to be solicited via a separate message exchange.*		◉ Yes, accepts aggressive mode requests ○ No, does not accept aggressive mode requests Note: Configurable. This is the default setting	software **SCADAPack x70 Security Administrator** ----------
1.12.5 Aggressive mode of operation (issuing): *DNP3 devices must support the issuing of "aggressive" mode of operation, where challenge data used for authentication is appended to a critical message rather than needing to be solicited via a separate message exchange. Specific instances of devices may have the use of aggressive mode switched off.*		○ Yes, issues aggressive mode requests ◉ No, does not issue aggressive mode requests Note: Configurable. This is the default setting	software **SCADAPack x70 Security Administrator** ----------
1.12.6 Session key change interval:	☑ Can be disabled	Enabled 1800 seconds	software **SCADAPack x70 Security**

To counter an attack that compromises the session key, the session key is changed by the master at regular intervals. Outstation devices invalidate the current set of session keys if they have not been changed by the master station after a period of twice this configured value. *To accommodate systems with infrequent communications, this change interval can be disabled and just the session key change message count used (see 1.12.7)*	When enabled ☑ Configurable, range **1** to **1209600**seconds	Note: This is the default setting	**Administrator** ----------
1.12.7 Session key change message count: *In addition to changing the session key at regular intervals, the key shall also be changed after a specified number of messages have been exchanged. The maximum allowable value for this message count is 10,000*	☑ Configurable, range **10** to **60000**	2000 Note: This is the default setting	software **SCADAPack x70 Security Administrator** ----------
1.12.8 Maximum error count (SAv2 only): *To assist in countering denial of service attacks, a DNP3 device shall stop replying with error codes after a number of successive authentication failures. This error count has a maximum value of 10. Setting the error count to zero inhibits all error messages.* *See 1.12.21 for error counts when using SAv5*	☐ Not applicable (not using SAv2) ☑ Configurable, range **0** to **10**	2 Note: This is the default setting	software **SCADAPack x70 Security Administrator** ----------
1.12.10 Key-wrap algorithm to encrypt session keys: *During the update of a session key, the key is encrypted using AES-128 or optionally using other algorithms.*	☑ AES-128 ☐ AES-256 ☐ Other, explain:	AES-128	software **SCADAPack x70 Security Administrator** ----------

1.12.11 Cipher Suites used with DNP implementations using TLS: *When TLS is supported, DNP3 Secure Authentication mandates the support of TLS_RSA_WITH_AES_128_SHA. The specification has a number of recommended cipher suite combinations. Indicate the supported Cipher Suites for implementations using TLS.*	☑ Not relevant - TLS is not used ☐ TLS_RSA encrypted with AES128 ☐ TLS_RSA encrypted with RC4_128 ☐ TLS_RSA encrypted with 3DES_EDE_CBC ☐ TLS_DH, signed with DSS, encrypted with 3DES_EDE_CBC ☐ TLS_DH, signed with RSA, encrypted with 3DES_EDE_CBC ☐ TLS_DHE, signed with DSS, encrypted with 3DES_EDE_CBC ☐ TLS_DHE, signed with RSA, encrypted with 3DES_EDE_CBC ☐ TLS_DH, signed with DSS, encrypted with AES128 ☐ TLS_DH, signed with DSS, encrypted with AES256 ☐ TLS_DH encrypted with AES128 ☐ TLS_DH encrypted with AES256 ☐ Other, explain:		
1.12.12 Change cipher request timeout: *Implementations using TLS shall terminate the connection if a response to a change cipher request is not seen within this timeout period.*	☑ Not relevant - TLS is not used ☐ Fixed at ☐ Configurable, range to ☐ Configurable, selectable from		

	☐ Configurable, other, describe		
1.12.13 Number of Certificate Authorities supported: *Implementations using TLS shall support at least 4 Certificate Authorities. Indicate the number supported.*			
1.12.14 Certificate Revocation check time: *Implementations using TLS shall evaluate Certificate Revocation Lists on a periodic basis, terminating a connection if a certificate is revoked.*	☑ Not relevant - TLS is not used ☐ Fixed at hours ☐ Configurable, range to hours ☐ Configurable, selectable from hours ☐ Configurable, other, describe		
1.12.15 Additional critical function codes: *The DNP3 specification defines those messages with specific function codes that are critical and must be used as part of a secure authentication message exchange. Messages with other function codes are optional and changes to this list should be noted here.* *Note: Secure Authentication version 5 defines additional functions as critical that were not considered critical in version 2. These are shown in the next column annotated with "V2 only".*	Additional function codes that are to be considered as "critical": ☐ 0 (Confirm) ☐ 1 (Read) ☐ 7 (Immediate freeze) ☐ 8 (Immediate freeze - no ack) ☐ 9 (Freeze-and-clear) ☐ 10 (Freeze-and-clear - no ack) ☐ 11 (Freeze-at-time) ☐ 12 (Freeze-at-time - no ack) ☑ 22 (Assign Class) ☐ 23 (Delay Measurement) ☑ 25 (Open File) - V2 only ☐ 26 (Close File) - V2 only ☑ 27 (Delete File) - V2 only		

	☐28 (Get File Info) - V2 only ☐30 (Abort File) - V2 only ☐129 (Response) ☐130 (Unsolicited Response)		
1.12.16 Other critical fragments: *Other critical transactions can be defined and should be detailed here. Examples could be based on time (for example: the first transaction after a communications session is established). Other examples could be based on specific data objects (for example: the reading of specific data points).*	External requests to modify configuration or firmware		

1.13 BROADCAST FUNCTIONALITY	**Capabilities**	**Current Value**	**If configurable list methods**
This section indicates which functions are supported by the device when using broadcast addresses. Note that this section shows only entries that may have a meaningful purpose when used with broadcast requests.			
1.13.1 Support for broadcast functionality:	○ Disabled ◉ Enabled ○ Configurable	Enabled	

2 Mapping to IEC 61850 Object Models

This optional section allows each configuration parameter or point in the DNP Data map to be tied to an attribute in the IEC 61850 object models.

Earlier versions of this section (up to version 2.07) used mappings based on an "access point" (section 2.1.1 and then a series of XPath references (section 2.1.2). Section 2.1.2 has been superseded in version 2.08 onwards with mappings defined using either predefined

rules (section 2.1.3) or specified as an equation (section 2.1.4). The list of pre-defined rules is found in the IEEE 1815-1 document.

TREE MPPING BETWEEN DNP3 AND IEC 61850 OBJECTS
2.1.3 Rule based mapping Use this element when mapping to/from iec61850 using one of the predefined rules in IEEE 1815.1 Mapping is bi-directional
This section is not included in this Profile.
2.1.4 Equation based mapping Use this element when mapping to/from iec61850 using an equation to map 0 or more input parameters to a single output parameter. Direction of mapping is determined by the variable on the left hand side of the equation.
This section is not included in this Profile.

3 Capabilities and Current Settings for Device Database (Outstation only)

The following tables identify the capabilities and current settings for each DNP3 data type. Details defining the data points available in the device are shown in part 5 of this Device Profile.

3.1 BINARY INPUTS **Static (Steady-State) Group Number: 1** **Event Group Number: 2**			
.	**Capabilities (leave tick-boxes blank if this data type is not supported)**	**Current Value**	**If configurable list methods**
3.1.1 Static Variation reported when variation 0 requested or in response to Class polls:	☑ Variation 1 - packed format ☑ Variation 2 - with flag ☑ Based on point index (add column to table in part 5)	One Note: This is the default setting	software **SCADAPack x70 RemoteConnect** ----------
3.1.2 Event Variation reported when variation 0 requested or in response to Class polls:	☑ Variation 1 - without time ☑ Variation 2 - with absolute time	Two Note: This is the default setting	software **SCADAPack x70 RemoteConnect**

Note: The support for binary input events can be determined remotely using protocol object Group 0 Variation 237.	☑ Variation 3 - with relative time ☐ Based on point index (add column to table in part 5)		----------
3.1.3 Event reporting mode: *When responding with event data and more than one event has occurred for a data point, an Outstation may include all events or only the most recent event. "All events" must be checked to be compliant.*	☐ Only most recent ☑ All events ☐ Based on point index (add column to table in part 5)	All events	
3.1.4 Binary Inputs included in Class 0 response:	☐ Always ☐ Never ☐ Only if point is assigned to a class ☑ Based on point index (add column to table in part 5)	Never Note: This is the default setting	software **SCADAPack x70 RemoteConnect** ----------
3.1.5 Binary Inputs Event Buffer Organization: *When event buffers are allocated per object group (see part 1.7.6), indicate the number of events that can be buffered for Binary Inputs. If event buffers are not allocated per object group then set "Fixed at 0".*	☑ Fixed at **0** ☐ Configurable, range to ☐ Configurable, selectable from ☐ Configurable, other, describe		

3.2 DOUBLE-BIT BINARY INPUTS

Static (Steady-State) Group Number: 3
Event Group Number: 4

.	**Capabilities (leave tick-boxes blank if this data type is not supported)**	**Current Value**	**If configurable list methods**
This section is not included in this Profile.			

3.3 BINARY OUTPUT STATUS AND CONTROL RELAY OUTPUT BLOCK

Binary Output Status Group Number: 10

Binary Output Event Group Number: 11
CROB Group Number: 12
Binary Output Command Event Group Number: 13

.	**Capabilities (leave tick-boxes blank if this data type is not supported)**	**Current Value**	**If configurable list methods**
3.3.1 Minimum pulse time allowed with Trip, Close and Pulse On commands:	☑ Fixed at **0** ms (hardware may limit this further) ☐ Based on point index (add column to table in part 5)	Fixed at 0 ms	
3.3.2 Maximum pulse time allowed with Trip, Close and Pulse On commands:	☑ Fixed at **65535** ms (hardware may limit this further ☐ Based on point index (add column to table in part 5)	Fixed at 65535 ms	
3.3.3 Binary Output Status included in Class 0 response:	☐ Always ☐ Never ☐ Only if point is assigned to a class ☑ Based on point index (add column to table in part 5)	Never Note: This is the default setting	software **SCADAPack x70 RemoteConnect** ----------
3.3.4 Reports Output Command Event Objects:	☑ Never ☐ Only upon a successful Control ☑ Upon all control attempts Note: Only sent under certain conditions when operating as a Data Concentrator	Never Note: This is the default setting	
3.3.5 Static Variation reported when variation 0 requested or in response to Class polls:	☑ Variation 1 - packed format ☑ Variation 2 - output status with flags ☑ Based on point index (add column to table in part 5)	Two Note: This is the default setting	software **SCADAPack x70 RemoteConnect** ----------
3.3.6 Event Variation reported when variation 0	☑ Variation 1 - status without time ☑ Variation 2 - status with	Two	software **SCADAPack x70**

requested or in response to Class polls: *Note: The support for binary output events can be determined remotely using protocol object Group 0 Variation 222.*	time ☐ Based on point index (add column to table in part 5)	Note: This is the default setting	**RemoteConnect** ----------
3.3.7 Command Event Variation reported when variation 0 requested or in response to Class polls:	☑ Variation 1 - command status without time ☑ Variation 2 - command status with time ☐ Based on point index (add column to table in part 5)	Two Note: This is the default setting	software **SCADAPack x70 RemoteConnect** ----------
3.3.8 Event reporting mode: *When responding with event data and more than one event has occurred for a data point, an Outstation may include all events or only the most recent event.*	☐ Only most recent ☑ All events	All events	
3.3.9 Command Event reporting mode: *When responding with event data and more than one event has occurred for a data point, an Outstation may include all events or only the most recent event.*	☐ Only most recent ☑ All events	All events	
3.3.10 Maximum Time between Select and Operate:	☐Not Applicable ☐ Fixed at seconds ☑ Configurable, range **0** to **65535**seconds ☐ Configurable, selectable from seconds ☐Configurable, other, describe ☐ Variable, explain ☐ Based on point index (add column to table in part 5)	10 seconds Note: This is the default setting	software **SCADAPack x70 RemoteConnect** ----------
3.3.11 Binary Outputs Event Buffer Organization:			

When event buffers are allocated per object group (see part 1.7.6), indicate the number of events that can be buffered for Binary Outputs. If event buffers are not allocated per object group then set "Fixed at 0".	☑ Fixed at **0** ☐ Configurable, range to ☐ Configurable, selectable from ☐ Configurable, other, describe		
3.3.12 Binary Output Commands Event Buffer Organization: *When event buffers are allocated per object group (see part 1.7.6), indicate the number of events that can be buffered for Binary Output Commands. If event buffers are not allocated per object group then set "Fixed at 0".*	☑ Fixed at **0** ☐ Configurable, range to ☐ Configurable, selectable from ☐ Configurable, other, describe		

3.4 COUNTERS / FROZEN COUNTERS **Counter Group Number: 20** **Frozen Counter Group Number: 21** **Counter Event Group Number: 22** **Frozen Counter Event Group Number: 23**			
.	**Capabilities (leave tick-boxes blank if this data type is not supported)**	**Current Value**	**If configurable list methods**
3.4.1 Static Counter Variation reported when variation 0 requested or in response to Class polls:	☑ Variation 1 - 32-bit with flag ☑ Variation 2 - 16-bit with flag ☑ Variation 5 - 32-bit without flag ☑ Variation 6 - 16-bit without flag ☑ Based on point index (add column to table in part 5)	One Note: This is the default setting	software **SCADAPack x70 RemoteConnect** ----------
3.4.2 Counter Event Variation reported when variation 0 requested or in response to Class polls:	☑ Variation 1 - 32-bit with flag ☑ Variation 2 - 16-bit with flag	Five Note: This is the default setting	software **SCADAPack x70 RemoteConnect**

Note: The support for counter events can be determined remotely using protocol object Group 0 Variation 227.	☑ Variation 5 - 32-bit with flag and time ☑ Variation 6 - 16-bit with flag and time ☐ Based on point index (add column to table in part 5)		----------
3.4.3 Counters included in Class 0 response:	☐ Always ☐ Never ☐ Only if point is assigned to a class ☑ Based on point index (add column to table in part 5)	Never Note: This is the default setting	software **SCADAPack x70 RemoteConnect** ----------
3.4.4 Counter Event reporting mode: *When responding with event data and more than one event has occurred for a data point, an Outstation may include all events or only the most recent event. Only the most recent event is typically reported for Counters. When reporting only the most recent event the counter value returned in the response may be either the value at the time that the event is queued or it may be the value at the time of the response.*	☐ A: Only most recent (value at time of event) ☐ B: Only most recent (value at time of response) ☑ C: All events ☐ Based on point index (add column to table in part 5)	All events	
3.4.5 Static Frozen Counter Variation reported when variation 0 requested or in response to Class polls:	☐ Variation 1 - 32-bit with flag ☐ Variation 2 - 16-bit with flag ☐ Variation 5 - 32-bit with flag and time ☐ Variation 6 - 16-bit with flag and time ☐ Variation 9 - 32-bit without flag ☐ Variation 10 - 16-bit without flag ☐ Based on point index		

	(add column to table in part 5) Note: Not applicable - frozen counters not supported		
3.4.6 Frozen Counter Event Variation reported when variation 0 requested or in response to Class polls: *Note: The support for frozen counter events can be determined remotely using protocol object Group 0 Variation 225.*	☐ Variation 1 - 32-bit with flag ☐ Variation 2 - 16-bit with flag ☐ Variation 5 - 32-bit without flag ☐ Variation 6 - 16-bit without flag ☐ Based on point index (add column to table in part 5) Note: Not applicable - frozen counters not supported		
3.4.7 Frozen Counters included in Class 0 response:	☐ Always ☐ Never ☐ Only if point is assigned to a class ☐ Based on point index (add column to table in part 5) Note: Not applicable - frozen counters not supported		
3.4.8 Frozen Counter Event reporting mode: *When responding with event data and more than one event has occurred for a data point, an Outstation may include all events or only the most recent event. All events are typically reported for Frozen Counters*	☐ Only most recent frozen value ☐ All frozen values ☐ Based on point index (add column to table in part 5) Note: Not applicable - frozen counters not supported		
3.4.9 Counters Roll Over at:	☐ 16 Bits (65,535) ☑ 32 Bits (4,294,967,295) ☐ Fixed at ☐ Configurable, range to	4,294,967,295	

	☐ Configurable, selectable from ☐ Configurable, other, describe ☐ Based on point index (add column to table in part 5)		
3.4.10 Counters frozen by means of:	☐ Master Request ☐ Freezes itself without concern for time of day ☐ Freezes itself and requires time of day ☐ Other, explain: Note: Not applicable - frozen counters not supported		
3.4.11 Counters Event Buffer Organization: *When event buffers are allocated per object group (see part 1.7.6), indicate the number of events that can be buffered for Counters. If event buffers are not allocated per object group then set "Fixed at 0".*	☑ Fixed at **0** ☐ Configurable, range to ☐ Configurable, selectable from ☐ Configurable, other, describe		
3.4.12 Frozen Counters Event Buffer Organization: *When event buffers are allocated per object group (see part 1.7.6), indicate the number of events that can be buffered for Frozen Counters. If event buffers are not allocated per object group then set "Fixed at 0".*	☑ Fixed at **0** ☐ Configurable, range to ☐ Configurable, selectable from ☐ Configurable, other, describe		
3.4.13 Reports counter events for change of value: *Indicate if counter events are created when the counter value changes.*	☐ Yes for all counters ☐ No for all counters ☑ Based on point index (add column to table in part 5)		

3.5 ANALOG INPUTS / FROZEN ANALOG INPUTS **Static (Steady-State) Group Number: 30** **Static Frozen Group Number: 31** **Event Group Number: 32** **Frozen Analog Input Event Group Number: 31** **Deadband Group Number: 34**			
.	**Capabilities (leave tick-boxes blank if this data type is not supported)**	**Current Value**	**If configurable list methods**
3.5.1 Static Variation reported when variation 0 requested or in response to Class polls:	☑ Variation 1 - 32-bit with flag ☑ Variation 2 - 16-bit with flag ☑ Variation 3 - 32-bit without flag ☑ Variation 4 - 16-bit without flag ☑ Variation 5 - single-precision floating point with flag ☐ Variation 6 - double-precision floating point with flag ☑ Based on point index (add column to table in part 5)	One Note: This is the default setting	software **SCADAPack x70 RemoteConnect** ----------
3.5.2 Event Variation reported when variation 0 requested or in response to Class polls: *Note: The support for analog input events can be determined remotely using protocol object Group 0 Variation 231.*	☑ Variation 1 - 32-bit without time ☑ Variation 2 - 16-bit without time ☑ Variation 3 - 32-bit with time ☑ Variation 4 - 16-bit with time ☑ Variation 5 - single-precision floating point w/o time ☐ Variation 6 - double-precision floating point w/o time ☑ Variation 7 - single-precision floating point with time ☐ Variation 8 - double-precision floating point	Three Note: This is the default setting	software **SCADAPack x70 RemoteConnect** ----------

	with time ☑ Based on point index (add column to table in part 5)		
3.5.3 Event reporting mode: *When responding with event data and more than one event has occurred for a data point, an Outstation may include all events or only the most recent event. Only the most recent event is typically reported for Analog Inputs. When reporting only the most recent event the analog value returned in the response may be either the value at the time that the event is queued or it may be the value at the time of the response.*	☑ A: Only most recent (value at time of event) ☐ B: Only most recent (value at time of response) ☑ C: All events ☐ Based on point index (add column to table in part 5)	All events Note: This is the default setting	software **SCADAPack x70 RemoteConnect** ----------
3.5.4 Analog Inputs included in Class 0 response:	☐ Always ☐ Never ☐ Only if point is assigned to a class ☑ Based on point index (add column to table in part 5)	Never Note: This is the default setting	software **SCADAPack x70 RemoteConnect** ----------
3.5.5 How Deadbands are set:	☐ A. Global Fixed ☑ B. Configurable through DNP ☑ C. Configurable via other means ☐ D. Other, explain: ☑ Based on point index - column in part 5 specifies which of the options applies, B, C, or D		software **SCADAPack x70 RemoteConnect** ----------
3.5.6 Analog Deadband Algorithm: simple- just compares the difference	☑ Simple ☑ Integrating ☐ Other, explain: ☑ Based on point index	Simple Note: This is the default setting	software **SCADAPack x70 RemoteConnect**

from the previous reported value integrating- keeps track of the accumulated change other- indicating another algorithm	(add column to table in part 5)		----------
3.5.7 Static Frozen Analog Input Variation reported when variation 0 requested or in response to Class polls:	☐ Variation 1 - 32-bit with flag ☐ Variation 2 - 16-bit with flag ☐ Variation 3 - 32-bit with time-of-freeze ☐ Variation 4 - 16-bit with time-of-freeze ☐ Variation 5 - 32-bit without flag ☐ Variation 6 - 16-bit without flag ☐ Variation 7 - single-precision floating point with flag ☐ Variation 8 - double-precision floating point with flag ☐ Based on point index (add column to table in part 5) Note: Not applicable - frozen analogs not supported		
3.5.8 Frozen Analog Input Event Variation reported when variation 0 requested or in response to Class polls: *Note: The support for frozen analog input events can be determined remotely using protocol object Group 0 Variation 230.*	☐ Variation 1 - 32-bit without time ☐ Variation 2 - 16-bit without time ☐ Variation 3 - 32-bit with time ☐ Variation 4 - 16-bit with time ☐ Variation 5 - single-precision floating point w/o time ☐ Variation 6 - double-		

	precision floating point w/o time ☐ Variation 7 - single-precision floating point with time ☐ Variation 8 - double-precision floating point with time ☐ Based on point index (add column to table in part 5) Note: Not applicable - frozen analogs not supported		
3.5.9 Frozen Analog Inputs included in Class 0 response:	☐ Always ☐ Never ☐ Only if point is assigned to a class ☐ Based on point index (add column to table in part 5) Note: Not applicable - frozen analogs not supported		
3.5.10 Frozen Analog Input Event reporting mode: *When responding with event data and more than one event has occurred for a data point, an Outstation may include all events or only the most recent event. All events are typically reported for Frozen Analog Inputs.*	☐ Only most recent frozen value ☐ All frozen values ☐ Based on point index (add column to table in part 5) Note: Not applicable - frozen analogs not supported		
3.5.11 Analog Inputs Event Buffer Organization: *When event buffers are allocated per object group (see part 1.7.6), indicate the number of events that can be buffered for Analog Inputs. If event buffers are*	☑ Fixed at **0** ☐ Configurable, range to ☐ Configurable, selectable from ☐ Configurable, other, describe		

not allocated per object group then set "Fixed at 0".			
3.5.12 Frozen Analog Inputs Event Buffer Organization: *When event buffers are allocated per object group (see part 1.7.6), indicate the number of events that can be buffered for Frozen Analog Inputs. If event buffers are not allocated per object group then set "Fixed at 0".*	☐ Fixed at ☐ Configurable, range to ☐ Configurable, selectable from ☐ Configurable, other, describe Note: Not applicable - frozen analogs not supported		

3.6 ANALOG OUTPUTS / ANALOG OUTPUT COMMANDS **Analog Output Status Group Number: 40** **Analog Outputs Group Number: 41** **Analog Output Events Group Number: 42** **Analog Output Command Events Group Number: 43**			
.	**Capabilities (leave tick-boxes blank if this data type is not supported)**	**Current Value**	**If configurable list methods**
3.6.1 Static Analog Output Status Variation reported when variation 0 requested or in response to Class polls:	☑ Variation 1 - 32-bit with flag ☑ Variation 2 - 16-bit with flag ☑ Variation 3 - single-precision floating point with flag ☐ Variation 4 - double-precision floating point with flag ☑ Based on point index (add column to table in part 5)	One Note: This is the default setting	software **SCADAPack x70 RemoteConnect** ----------
3.6.2 Analog Output Status included in Class 0 response:	☐ Always ☐ Never ☐ Only if point is assigned to a class ☑ Based on point index (add column to table in part 5)	Never Note: This is the default setting	software **SCADAPack x70 RemoteConnect** ----------
		Never	

3.6.3 Reports Output Command Event Objects:	☑ Never ☐ Only upon a successful Control ☑ Upon all control attempts Note: Only sent under certain conditions when operating as a Data Concentrator	Note: This is the default setting	
3.6.4 Event Variation reported when variation 0 requested or in response to Class polls: *Note: The support for analog output events can be determined remotely using protocol object Group 0 Variation 219.*	☑ Variation 1 - 32-bit without time ☑ Variation 2 - 16-bit without time ☑ Variation 3 - 32-bit with time ☑ Variation 4 - 16-bit with time ☑ Variation 5 - single-precision floating point w/o time ☐ Variation 6 - double-precision floating point w/o time ☑ Variation 7 - single-precision floating point with time ☐ Variation 8 - double-precision floating point with time ☑ Based on point index (add column to table in part 5)	Three Note: This is the default setting	software **SCADAPack x70 RemoteConnect** ----------
3.6.5 Command Event Variation reported when variation 0 requested or in response to Class polls:	☑ Variation 1 - 32-bit without time ☑ Variation 2 - 16-bit without time ☑ Variation 3 - 32-bit with time ☑ Variation 4 - 16-bit with time ☑ Variation 5 - single-precision floating point w/o time ☐ Variation 6 - double-precision floating point w/o	Three Note: This is the default setting	software **SCADAPack x70 RemoteConnect** ----------

	time ☑ Variation 7 - single-precision floating point with time ☐ Variation 8 - double-precision floating point with time ☑ Based on point index (add column to table in part 5)		
3.6.6 Event reporting mode: *When responding with event data and more than one event has occurred for a data point, an Outstation may include all events or only the most recent event.*	☐ Only most recent ☑ All events		
3.6.7 Command Event reporting mode: *When responding with event data and more than one event has occurred for a data point, an Outstation may include all events or only the most recent event.*	☐ Only most recent ☑ All events		
3.6.8 Maximum Time between Select and Operate:	☐Not Applicable ☐ Fixed at seconds ☑ Configurable, range **0** to **65535** seconds ☐ Configurable, selectable from seconds ☐Configurable, other, describe ☐ Variable, explain ☐ Based on point index (add column to table in part 5)	10 seconds Note: This is the default setting	software **SCADAPack x70 RemoteConnect** ----------
3.6.9 Analog Outputs Event Buffer Organization: *When event buffers are allocated per object group (see part 1.7.6), indicate the number of events that can be buffered for Analog*	☑ Fixed at **0** ☐ Configurable, range to ☐ Configurable, selectable from ☐Configurable, other, describe		

Outputs. If event buffers are not allocated per object group then set "Fixed at 0".			
3.6.10 Analog Output Commands Event Buffer Organization: *When event buffers are allocated per object group (see part 1.7.6), indicate the number of events that can be buffered for Analog Output Commands. If event buffers are not allocated per object group then set "Fixed at 0".*	☑ Fixed at **0** ☐ Configurable, range to ☐ Configurable, selectable from ☐ Configurable, other, describe		

3.7 FILE CONTROL **Group Number: 70**			
.	**Capabilities**	**Current Value**	**If configurable list methods**
3.7.1 File Transfer Supported:	☑ Supported If not supported then do not complete other entries in section 3.7)		
3.7.2 File Authentication: *Indicates whether a valid authentication key must be obtained prior to open and delete requests.*	☐ Always ☐ Sometimes, explain ☑ Never	Never	
3.7.3 File Append Mode: *Indicates if a file can be opened and appended to versus just overwritten.*	☑ Always ☐ Sometimes, explain ☐ Never	Always	
3.7.4 Permissions Support: *Indicates the device is capable of using the indicated permissions.*	☐ Owner Read Allowed: 0x0100 ☐ Owner Write Allowed: 0x0080 ☐ Owner Execute Allowed: 0x0040 ☐ Group Read Allowed: 0x0020		

	☐ Group Write Allowed: 0x0010 ☐ Group Execute Allowed: 0x0008 ☐ World Read Allowed: 0x0004 ☐ World Write Allowed: 0x0002 ☐ World Execute Allowed: 0x0001		
3.7.5 Multiple Blocks in a Fragment: *File data is transferred in a series of blocks of a maximum specified size. This indicates whether only a single block or multiple blocks will be sent in fragment.*	☐ Yes ☑ No	No	
3.7.6 Max number of Files Open at one time:	☑ Fixed at **1** ☐ Configurable, range to ☐ Configurable, selectable from ☐ Configurable, other, describe	1	

3.8 OCTET STRING AND EXTENDED OCTET STRING POINTS **Static (Steady-State) Group Number: 110, 114** **Event Group Number: 111, 115**			
.	**Capabilities**	**Current Value**	**If configurable list methods**
3.8.1 Event reporting mode: *When responding with event data and more than one event has occurred for a data point, an Outstation may include all events or only the most recent event.*	☐ Only most recent ☐ All events ☐ Based on point index (add column to table in part 5) Note: Not applicable - device does not generate string events		
3.8.2 Octet Strings included in Class 0 response:	☐ Always ☑ Never ☐ Only if point is assigned to a class	Never	

	☐ Based on point index (add column to table in part 5)		
3.8.3 Octet Strings Event Buffer Organization: *When event buffers are allocated per object group (see part 1.7.6), indicate the number of events that can be buffered for Octet Strings. If event buffers are not allocated per object group then set "Fixed at 0".*	☑ Fixed at **0** ☐ Configurable, range to ☐ Configurable, selectable from ☐ Configurable, other, describe		
3.8.4 Object Group Selection: *Indicate which object group is used to transport octet string objects.*	☑ Fixed, group 110 for all objects ☐ Fixed, group 114 for all objects ☐ Configurable, group 110 or 114 for all objects ☐ Based on point Index (add column to table in part 5)		

3.9 VIRTUAL TERMINAL PORT NUMBERS (POINTS)

Static (Steady-State) Group Number: 112
Event Group Number: 113

.	**Capabilities**	**Current Value**	**If configurable list methods**
3.9.1 Virtual Terminals Event Buffer Organization: *When event buffers are allocated per object group (see part 1.7.6), indicate the number of events that can be buffered for Virtual Terminals. If event buffers are not allocated per object group then set "Fixed at 0".*	☑ Fixed at **0** ☐ Configurable, range to ☐ Configurable, selectable from ☐ Configurable, other, describe		

3.10 DATA SET PROTOTYPE

Group Number: 85
Variation Number: 1

.	**Capabilities**		

		Current Value	**If configurable list methods**

This version of the Device Profile has no requirement for describing Data Set Prototype capabilities and current settings. This page is intentionally left blank, existing as placeholder for future use.

3.11 DATA SET DESCRIPTOR CONTENTS AND CHARACTERISTICS
Group Number: 86
Variation Numbers: 1 and 2

This version of the Device Profile has no requirement for describing Data Set Descriptor capabilities and current settings. This page is intentionally left blank, existing as placeholder for future use.

4 Implementation Table

The following implementation table identifies which object groups and variations, function codes and qualifiers the device supports in both requests and responses. The *Request* columns identify all requests that may be sent by a Master, or all requests that must be parsed by an Outstation. The *Response* columns identify all responses that must be parsed by a Master, or all responses that may be sent by an Outstation.

DNP OBJECT GROUP & VARIATION			**REQUEST Master may issue Outstation must parse**		**RESPONSE Master must parse Outstation may issue**	
Object Group Number	**Variation Number**	**Description**	**Function Codes (dec)**	**Qualifier Codes (hex)**	**Function Codes (dec)**	**Qualifier Codes (hex)**
0	203	Device Attributes - Device location altitude (metres)	1 *(read)*	00 *(start-stop)*	*(Response)*	00, 17 *(index)*
0	203	Device Attributes - Device location altitude (metres)	2 *(write)*	00 *(start-stop)*		
0	204	Device Attributes - Device location longitude (degrees East)	1 *(read)*	00 *(start-stop)*	*(Response)*	00, 17 *(index)*
0	204	Device Attributes - Device location longitude (degrees East)	2 *(write)*	00 *(start-stop)*		
0	205		1 *(read)*		*(Response)*	

		Device Attributes - Device location latitude (degrees North)		00 *(start-stop)*		00, 17 *(index)*
0	205	Device Attributes - Device location latitude (degrees North)	2*(write)*	00 *(start-stop)*		
0	211	Device Attributes - Identifier of support for user-specific attributes	1*(read)*	00 *(start-stop)*	*(Response)*	00, 17 *(index)*
0	212	Device Attributes - Number of master-defined data set prototypes	1*(read)*	00 *(start-stop)*	*(Response)*	00, 17 *(index)*
0	213	Device Attributes - Number of outstation-defined data set prototypes	1*(read)*	00 *(start-stop)*	*(Response)*	00, 17 *(index)*
0	214	Device Attributes - Number of master-defined data sets	1*(read)*	00 *(start-stop)*	*(Response)*	00, 17 *(index)*
0	215	Device Attributes - Number of outstation-defined data sets	1*(read)*	00 *(start-stop)*	*(Response)*	00, 17 *(index)*
0	216	Device Attributes - Max number of binary outputs per request	1*(read)*	00 *(start-stop)*	*(Response)*	00, 17 *(index)*
0	217	Device Attributes - Local timing accuracy	1*(read)*	00 *(start-stop)*	*(Response)*	00, 17 *(index)*
0	218	Device Attributes - Duration of timing accuracy	1*(read)*	00 *(start-stop)*	*(Response)*	00, 17 *(index)*
0	219	Device Attributes - Support for analog output events	1*(read)*	00 *(start-stop)*	*(Response)*	00, 17 *(index)*
0	220	Device Attributes - Max analog output index	1*(read)*	00 *(start-stop)*	*(Response)*	00, 17 *(index)*
0	221	Device Attributes - Number of analog outputs	1*(read)*	00 *(start-stop)*	*(Response)*	00, 17 *(index)*
0	222	Device Attributes - Support for binary output events	1*(read)*	00 *(start-stop)*	*(Response)*	00, 17 *(index)*
0	223	Device Attributes - Max binary output index	1*(read)*	00 *(start-stop)*	*(Response)*	00, 17 *(index)*

0	224	Device Attributes - Number of binary outputs	1 *(read)*	00 *(start-stop)*	*(Response)*	00, 17 *(index)*
0	225	Device Attributes - Support for frozen counter events	1 *(read)*	00 *(start-stop)*	*(Response)*	00, 17 *(index)*
0	226	Device Attributes - Support for frozen counters	1 *(read)*	00 *(start-stop)*	*(Response)*	00, 17 *(index)*
0	227	Device Attributes - Support for counter events	1 *(read)*	00 *(start-stop)*	*(Response)*	00, 17 *(index)*
0	228	Device Attributes - Max counter index	1 *(read)*	00 *(start-stop)*	*(Response)*	00, 17 *(index)*
0	229	Device Attributes - Number of counter points	1 *(read)*	00 *(start-stop)*	*(Response)*	00, 17 *(index)*
0	230	Device Attributes - Support for frozen analog inputs	1 *(read)*	00 *(start-stop)*	*(Response)*	00, 17 *(index)*
0	231	Device Attributes - Support for analog input events	1 *(read)*	00 *(start-stop)*	*(Response)*	00, 17 *(index)*
0	232	Device Attributes - Maximum analog input index	1 *(read)*	00 *(start-stop)*	*(Response)*	00, 17 *(index)*
0	233	Device Attributes - Number of analog input points	1 *(read)*	00 *(start-stop)*	*(Response)*	00, 17 *(index)*
0	234	Device Attributes - Support for double-bit binary input events	1 *(read)*	00 *(start-stop)*	*(Response)*	00, 17 *(index)*
0	235	Device Attributes - Maximum double-bit binary input index	1 *(read)*	00 *(start-stop)*	*(Response)*	00, 17 *(index)*
0	236	Device Attributes - Number of double-bit binary input points	1 *(read)*	00 *(start-stop)*	*(Response)*	00, 17 *(index)*
0	237	Device Attributes - Support for binary input events	1 *(read)*	00 *(start-stop)*	*(Response)*	00, 17 *(index)*
0	238	Device Attributes - Max binary input index	1 *(read)*	00 *(start-stop)*	*(Response)*	00, 17 *(index)*

0	239	Device Attributes - Number of binary input points	1*(read)*	00 *(start-stop)*	*(Response)*	00, 17 *(index)*
0	240	Device Attributes - Max transmit fragment size	1*(read)*	00 *(start-stop)*	*(Response)*	00, 17 *(index)*
0	240	Device Attributes - Max transmit fragment size	2*(write)*	00 *(start-stop)*		
0	241	Device Attributes - Max receive fragment size	1*(read)*	00 *(start-stop)*	*(Response)*	00, 17 *(index)*
0	242	Device Attributes - Device manufacturer's software version	1*(read)*	00 *(start-stop)*	*(Response)*	00, 17 *(index)*
0	243	Device Attributes - Device manufacturer's hardware version	1*(read)*	00 *(start-stop)*	*(Response)*	00, 17 *(index)*
0	245	Device Attributes - User-assigned location name	1*(read)*	00 *(start-stop)*	*(Response)*	00, 17 *(index)*
0	245	Device Attributes - User-assigned location name	2*(write)*	00 *(start-stop)*		
0	246	Device Attributes – User assigned ID code/number	1*(read)*	00 *(start-stop)*	*(Response)*	00, 17 *(index)*
0	246	Device Attributes – User assigned ID code/number	2*(write)*	00 *(start-stop)*		
0	247	Device Attributes - User-assigned device name	1*(read)*	00 *(start-stop)*	*(Response)*	00, 17 *(index)*
0	247	Device Attributes - User-assigned device name	2*(write)*	00 *(start-stop)*		
0	248	Device Attributes – Device serial number	1*(read)*	00 *(start-stop)*	*(Response)*	00, 17 *(index)*
0	249	Device Attributes – DNP subset and conformance	1*(read)*	00 *(start-stop)*	*(Response)*	00, 17 *(index)*
0	250	Device Attributes – Device manufacturer's product name and model	1*(read)*	00 *(start-stop)*	*(Response)*	00, 17 *(index)*
0	252		1*(read)*	00 *(start-stop)*	*(Response)*	00, 17 *(index)*

		Device Attributes – Device manufacturer's name				
0	254	Device Attributes - Non-specific all attributes request	1*(read)*	00, 01 *(start-stop)*, 06 *(no range, or all)*		
0	255	Device Attributes - List of attribute variations	1*(read)*	00, 01 *(start-stop)*, 06 *(no range, or all)*	*(Response)*	00, 5B
1	0	Binary Input - any variation	1*(read)*	00, 01 *(start-stop)*, 06 *(no range, or all)*		
1	0	Binary Input - any variation	22*(assign class)*	00, 01 *(start-stop)*, 06 *(no range, or all)*		
1	1	Binary Input - Single-bit packed	1*(read)*	00, 01 *(start-stop)*, 06 *(no range, or all)*	*(Response)*	00, 01 *(start-stop)*
1	2	Binary Input - Single-bit with flag	1*(read)*	00, 01 *(start-stop)*, 06 *(no range, or all)*	*(Response)*	00, 01 *(start-stop)*
2	0	Binary Input Change Event - any variation	1*(read)*	06 *(no range, or all)*, 07, 08 *(limited qty)*		
2	1	Binary Input Change Event - without time	1*(read)*	06 *(no range, or all)*, 07, 08	*(Response)*	17, 28 *(index)*

				(limited qty)		
2	1	Binary Input Change Event - without time			*(Unsol. Resp.)*	17, 28 *(index)*
2	2	Binary Input Change Event - with absolute time	1*(read)*	06 *(no range, or all)*, 07, 08 *(limited qty)*	*(Response)*	17, 28 *(index)*
2	2	Binary Input Change Event - with absolute time			*(Unsol. Resp.)*	17, 28 *(index)*
2	3	Binary Input Change Event - with relative time	1*(read)*	06 *(no range, or all)*, 07, 08 *(limited qty)*	*(Response)*	17, 28 *(index)*
2	3	Binary Input Change Event - with relative time			*(Unsol. Resp.)*	17, 28 *(index)*
3	0	Double-Bit Binary Input - any variation	1*(read)*	00, 01 *(start-stop)*, 06 *(no range, or all)*		
3	0	Double-Bit Binary Input - any variation	22*(assign class)*	00, 01 *(start-stop)*, 06 *(no range, or all)*		
3	1	Double-Bit Binary Input - packed format	1*(read)*	00, 01 *(start-stop)*, 06 *(no range, or all)*		
3	2	Double-Bit Binary Input - with flags	1*(read)*	00, 01 *(start-stop)*, 06 *(no range, or all)*		
4	0	Double-Bit Binary Input Change Event - any variation	1*(read)*	06 *(no range, or all)*,		

				07, 08 *(limited qty)*		
4	1	Double-Bit Binary Input Change Event - without time	1*(read)*	06 *(no range, or all)*, 07, 08 *(limited qty)*		
4	2	Double-Bit Binary Input Change Event - with absolute time	1*(read)*	06 *(no range, or all)*, 07, 08 *(limited qty)*		
4	3	Double-Bit Binary Input Change Event - with relative time	1*(read)*	06 *(no range, or all)*, 07, 08 *(limited qty)*		
10	0	Continuous Control - any variation	1*(read)*	00, 01 *(start-stop)*, 06 *(no range, or all)*		
10	0	Continuous Control - any variation	22*(assign class)*	00, 01 *(start-stop)*, 06 *(no range, or all)*		
10	2	Continuous Control - binary output status	1*(read)*	00, 01 *(start-stop)*, 06 *(no range, or all)*	*(Response)*	00, 01 *(start-stop)*
11	0	Binary Output Event - any variation	1*(read)*	06 *(no range, or all)*, 07, 08 *(limited qty)*		
11	1	Binary Output Event - Status without time	1*(read)*	06 *(no range, or all)*, 07, 08	*(Response)*	17, 28 *(index)*

				(limited qty)		
11	1	Binary Output Event - Status without time			*(Unsol. Resp.)*	17, 28 *(index)*
11	2	Binary Output Event - Status with time	1*(read)*	06 *(no range, or all)*, 07, 08 *(limited qty)*	*(Response)*	17, 28 *(index)*
11	2	Binary Output Event - Status with time			*(Unsol. Resp.)*	17, 28 *(index)*
12	0	Binary Command - control relay output block (CROB)	22*(assign class)*	00, 01 *(start-stop)*, 06 *(no range, or all)*		
12	1	Binary Command - control relay output block (CROB)	3*(select)*	17, 28 *(index)*	*(Response)*	echo of request
12	1	Binary Command - control relay output block (CROB)	4*(operate)*	17, 28 *(index)*	*(Response)*	echo of request
12	1	Binary Command - control relay output block (CROB)	5*(direct op.)*	17, 28 *(index)*	*(Response)*	echo of request
12	1	Binary Command - control relay output block (CROB)	6*(direct op, no ack)*	17, 28 *(index)*	*(Response)*	echo of request
13	0	Binary Output Command Event - any variation	1*(read)*	06 *(no range, or all)*, 07, 08 *(limited qty)*		
13	1	Binary Output Command Event - command status	1*(read)*	06 *(no range, or all)*, 07, 08 *(limited qty)*	*(Response)*	17, 28 *(index)*
13	1	Binary Output Command Event - command status			*(Unsol. Resp.)*	17, 28 *(index)*
13	2	Binary Output Command Event -	1*(read)*	06 *(no range, or*	*(Response)*	17, 28 *(index)*

		command status with time		*all)*, 07, 08 *(limited qty)*		
13	2	Binary Output Command Event - command status with time			*(Unsol. Resp.)*	17, 28 *(index)*
20	0	Counter - any variation	1*(read)*	00, 01 *(start-stop)*, 06 *(no range, or all)*		
20	0	Counter - any variation	7*(freeze)*	00, 01 *(start-stop)*, 06 *(no range, or all)*		
20	0	Counter - any variation	8*(freeze, no ack)*	00, 01 *(start-stop)*, 06 *(no range, or all)*		
20	0	Counter - any variation	9*(freeze & clear)*	00, 01 *(start-stop)*, 06 *(no range, or all)*		
20	0	Counter - any variation	10*(frz & clr, no ack)*	00, 01 *(start-stop)*, 06 *(no range, or all)*		
20	0	Counter - any variation	15*(init. data)*	00, 01 *(start-stop)*, 06 *(no range, or all)*		
20	0	Counter - any variation	22*(assign class)*	00, 01 *(start-stop)*, 06 *(no range, or all)*		

20	1	Counter - 32-bit with flag	1*(read)*	00, 01 *(start-stop)*, 06 *(no range, or all)*	*(Response)*	00, 01 *(start-stop)*
20	1	Counter - 32-bit with flag	2*(write)*	00, 01 *(start-stop)*		
20	2	Counter - 16-bit with flag	1*(read)*	00, 01 *(start-stop)*, 06 *(no range, or all)*	*(Response)*	00, 01 *(start-stop)*
20	2	Counter - 16-bit with flag	2*(write)*	00, 01 *(start-stop)*		
20	5	Counter - 32-bit without flag	1*(read)*	00, 01 *(start-stop)*, 06 *(no range, or all)*	*(Response)*	00, 01 *(start-stop)*
20	5	Counter - 32-bit without flag	2*(write)*	00, 01 *(start-stop)*		
20	6	Counter - 16-bit without flag	1*(read)*	00, 01 *(start-stop)*, 06 *(no range, or all)*	*(Response)*	00, 01 *(start-stop)*
20	6	Counter - 16-bit with flag	2*(write)*	00, 01 *(start-stop)*		
21	0	Frozen Counter - any variation	1*(read)*	00, 01 *(start-stop)*, 06 *(no range, or all)*		
21	0	Frozen Counter - any variation	22*(assign class)*	00, 01 *(start-stop)*, 06 *(no range, or all)*		
21	1	Frozen Counter - 32-bit with flag	1*(read)*	00, 01 *(start-stop)*, 06 *(no*		

				range, or all)		
21	2	Frozen Counter - 16-bit with flag	1*(read)*	00, 01 *(start-stop)*, 06 *(no range, or all)*		
21	5	Frozen Counter - 32-bit with flag and time	1*(read)*	00, 01 *(start-stop)*, 06 *(no range, or all)*		
21	6	Frozen Counter - 16-bit with flag and time	1*(read)*	00, 01 *(start-stop)*, 06 *(no range, or all)*		
21	9	Frozen Counter - 32-bit without flag	1*(read)*	00, 01 *(start-stop)*, 06 *(no range, or all)*		
21	10	Frozen Counter - 16-bit without flag	1*(read)*	00, 01 *(start-stop)*, 06 *(no range, or all)*		
22	0	Counter Change Event - any variation	1*(read)*	06 *(no range, or all)*, 07, 08 *(limited qty)*		
22	1	Counter Change Event - 32-bit with flag	1*(read)*	06 *(no range, or all)*, 07, 08 *(limited qty)*	*(Response)*	17, 28 *(index)*
22	1	Counter Change Event - 32-bit with flag			*(Unsol. Resp.)*	17, 28 *(index)*
22	2	Counter Change Event - 16-bit with flag	1*(read)*	06 *(no range, or all)*, 07, 08	*(Response)*	17, 28 *(index)*

				(limited qty)		
22	2	Counter Change Event - 16-bit with flag			*(Unsol. Resp.)*	17, 28 *(index)*
22	5	Counter Change Event - 32-bit with flag and time	1 *(read)*	06 *(no range, or all)*, 07, 08 *(limited qty)*	*(Response)*	17, 28 *(index)*
22	5	Counter Change Event - 32-bit with flag and time			*(Unsol. Resp.)*	17, 28 *(index)*
22	6	Counter Change Event - 16-bit with flag and time	1 *(read)*	06 *(no range, or all)*, 07, 08 *(limited qty)*	*(Response)*	17, 28 *(index)*
22	6	Counter Change Event - 16-bit with flag and time			*(Unsol. Resp.)*	17, 28 *(index)*
23	0	Frozen Counter Event - any variation	1 *(read)*	06 *(no range, or all)*, 07, 08 *(limited qty)*		
23	1	Frozen Counter Event - 32-bit with flag	1 *(read)*	06 *(no range, or all)*, 07, 08 *(limited qty)*		
23	2	Frozen Counter Event - 16-bit with flag	1 *(read)*	06 *(no range, or all)*, 07, 08 *(limited qty)*		
23	5	Frozen Counter Event - 32-bit with flag and time	1 *(read)*	06 *(no range, or all)*, 07, 08 *(limited qty)*		
23	6	Frozen Counter Event - 16-bit with flag and time	1 *(read)*	06 *(no range, or all)*, 07, 08		

				(limited qty)		
30	0	Analog Input - any variation	1*(read)*	00, 01 *(start-stop)*, 06 *(no range, or all)*		
30	0	Analog Input - any variation	22*(assign class)*	00, 01 *(start-stop)*, 06 *(no range, or all)*		
30	1	Analog Input - 32-bit with flag	1*(read)*	00, 01 *(start-stop)*, 06 *(no range, or all)*	*(Response)*	00, 01 *(start-stop)*
30	2	Analog Input - 16-bit with flag	1*(read)*	00, 01 *(start-stop)*, 06 *(no range, or all)*	*(Response)*	00, 01 *(start-stop)*
30	3	Analog Input - 32-bit without flag	1*(read)*	00, 01 *(start-stop)*, 06 *(no range, or all)*	*(Response)*	00, 01 *(start-stop)*
30	4	Analog Input - 16-bit without flag	1*(read)*	00, 01 *(start-stop)*, 06 *(no range, or all)*	*(Response)*	00, 01 *(start-stop)*
30	5	Analog Input - single-precision, floating-point with flag	1*(read)*	00, 01 *(start-stop)*, 06 *(no range, or all)*	*(Response)*	00, 01 *(start-stop)*
32	0	Analog Input Change Event - any variation	1*(read)*	06 *(no range, or all)*, 07, 08 *(limited qty)*		

32	1	Analog Input Change Event - 32-bit without time	1*(read)*	06 *(no range, or all)*, 07, 08 *(limited qty)*	*(Response)*	17, 28 *(index)*
32	1	Analog Input Change Event - 32-bit without time			*(Unsol. Resp.)*	17, 28 *(index)*
32	2	Analog Input Change Event - 16-bit without time	1*(read)*	06 *(no range, or all)*, 07, 08 *(limited qty)*	*(Response)*	17, 28 *(index)*
32	2	Analog Input Change Event - 16-bit without time			*(Unsol. Resp.)*	17, 28 *(index)*
32	3	Analog Input Change Event - 32-bit with time	1*(read)*	06 *(no range, or all)*, 07, 08 *(limited qty)*	*(Response)*	17, 28 *(index)*
32	3	Analog Input Change Event - 32-bit with time			*(Unsol. Resp.)*	17, 28 *(index)*
32	4	Analog Input Change Event - 16-bit with time	1*(read)*	06 *(no range, or all)*, 07, 08 *(limited qty)*	*(Response)*	17, 28 *(index)*
32	4	Analog Input Change Event - 16-bit with time			*(Unsol. Resp.)*	17, 28 *(index)*
32	5	Analog Input Change Event - single-precision, floating-point without time	1*(read)*	06 *(no range, or all)*, 07, 08 *(limited qty)*	*(Response)*	17, 28 *(index)*
32	5	Analog Input Change Event - single-precision, floating-point without time			*(Unsol. Resp.)*	17, 28 *(index)*
32	7	Analog Input Change Event - single-precision, floating-point with time	1*(read)*	06 *(no range, or all)*, 07, 08	*(Response)*	17, 28 *(index)*

				(limited qty)		
32	7	Analog Input Change Event - single-precision, floating-point with time			*(Unsol. Resp.)*	17, 28 *(index)*
34	0	Analog Input Deadband - any variation	1*(read)*	00, 01 *(start-stop)*, 06 *(no range, or all)*		
34	1	Analog Input Deadband - 16-bit	1*(read)*	00, 01 *(start-stop)*, 06 *(no range, or all)*	*(Response)*	00, 01 *(start-stop)*
34	1	Analog Input Deadband - 16-bit	2*(write)*	00, 01 *(start-stop)*, 06 *(no range, or all)*		
34	2	Analog Input Deadband - 32-bit	1*(read)*	00, 01 *(start-stop)*, 06 *(no range, or all)*	*(Response)*	00, 01 *(start-stop)*
34	2	Analog Input Deadband - 32-bit	2*(write)*	00, 01 *(start-stop)*, 06 *(no range, or all)*		
34	3	Analog Input Deadband - single-precision floating point	1*(read)*	00, 01 *(start-stop)*, 06 *(no range, or all)*	*(Response)*	00, 01 *(start-stop)*
34	3	Analog Input Deadband - single-precision floating point	2*(write)*	00, 01 *(start-stop)*, 06 *(no range, or all)*		
40	0	Analog Output Status - any variation	1*(read)*	00, 01 *(start-stop)*,		

				06 *(no range, or all)*		
40	0	Analog Output Status - any variation	22*(assign class)*	00, 01 *(start-stop)*, 06 *(no range, or all)*		
40	1	Analog Output Status - 32-bit with flag	1*(read)*	00, 01 *(start-stop)*, 06 *(no range, or all)*	*(Response)*	00, 01 *(start-stop)*
40	2	Analog Output Status - 16-bit with flag	1*(read)*	00, 01 *(start-stop)*, 06 *(no range, or all)*	*(Response)*	00, 01 *(start-stop)*
40	3	Analog Output Status - single-precision, floating-point with flag	1*(read)*	00, 01 *(start-stop)*, 06 *(no range, or all)*	*(Response)*	00, 01 *(start-stop)*
41	0	Analog Output Block - any variation	22*(assign class)*	00, 01 *(start-stop)*, 06 *(no range, or all)*		
41	1	Analog Output Block - 32-bit	3*(select)*	17, 28 *(index)*	*(Response)*	echo of request
41	1	Analog Output Block - 32-bit	4*(operate)*	17, 28 *(index)*	*(Response)*	echo of request
41	1	Analog Output Block - 32-bit	5*(direct op.)*	17, 28 *(index)*	*(Response)*	echo of request
41	1	Analog Output Block - 32-bit	6*(direct op, no ack)*	17, 28 *(index)*	*(Response)*	echo of request
41	2	Analog Output Block - 16-bit	3*(select)*	17, 28 *(index)*	*(Response)*	echo of request
41	2	Analog Output Block - 16-bit	4*(operate)*	17, 28 *(index)*	*(Response)*	echo of request
41	2	Analog Output Block - 16-bit	5*(direct op.)*	17, 28 *(index)*	*(Response)*	echo of request

41	2	Analog Output Block - 16-bit	6*(direct op, no ack)*	17, 28 *(index)*	*(Response)*	echo of request
41	3	Analog Output Block - single-precision, floating-point	3*(select)*	17, 28 *(index)*	*(Response)*	echo of request
41	3	Analog Output Block - single-precision, floating-point	4*(operate)*	17, 28 *(index)*	*(Response)*	echo of request
41	3	Analog Output Block - single-precision, floating-point	5*(direct op.)*	17, 28 *(index)*	*(Response)*	echo of request
41	3	Analog Output Block - single-precision, floating-point	6*(direct op, no ack)*	17, 28 *(index)*	*(Response)*	echo of request
42	0	Analog Output Event - any variation	1*(read)*	06 *(no range, or all)*, 07, 08 *(limited qty)*		
42	1	Analog Output Event - 32-bit without time	1*(read)*	06 *(no range, or all)*, 07, 08 *(limited qty)*	*(Response)*	17, 28 *(index)*
42	1	Analog Output Event - 32-bit without time			*(Unsol. Resp.)*	17, 28 *(index)*
42	2	Analog Output Event - 16-bit without time	1*(read)*	06 *(no range, or all)*, 07, 08 *(limited qty)*	*(Response)*	17, 28 *(index)*
42	2	Analog Output Event - 16-bit without time			*(Unsol. Resp.)*	17, 28 *(index)*
42	3	Analog Output Event - 32-bit with time	1*(read)*	06 *(no range, or all)*, 07, 08 *(limited qty)*	*(Response)*	17, 28 *(index)*
42	3	Analog Output Event - 32-bit with time			*(Unsol. Resp.)*	17, 28 *(index)*
42	4	Analog Output Event - 16-bit with time	1*(read)*	06 *(no range, or all)*,	*(Response)*	17, 28 *(index)*

				07, 08 *(limited qty)*		
42	4	Analog Output Event - 16-bit with time			*(Unsol. Resp.)*	17, 28 *(index)*
42	5	Analog Output Event - single-precision floating point without time	1 *(read)*	06 *(no range, or all)*, 07, 08 *(limited qty)*	*(Response)*	17, 28 *(index)*
42	5	Analog Output Event - single-precision floating point without time			*(Unsol. Resp.)*	17, 28 *(index)*
42	7	Analog Output Event - single-precision floating point with time	1 *(read)*	06 *(no range, or all)*, 07, 08 *(limited qty)*	*(Response)*	17, 28 *(index)*
42	7	Analog Output Event - single-precision floating point with time			*(Unsol. Resp.)*	17, 28 *(index)*
43	0	Analog Output Command Event - any variation	1 *(read)*	06 *(no range, or all)*, 07, 08 *(limited qty)*		
43	1	Analog Output Command Event - 32-bit without time	1 *(read)*	06 *(no range, or all)*, 07, 08 *(limited qty)*	*(Response)*	17, 28 *(index)*
43	1	Analog Output Command Event - 32-bit without time			*(Unsol. Resp.)*	17, 28 *(index)*
43	2	Analog Output Command Event - 16-bit without time	1 *(read)*	06 *(no range, or all)*, 07, 08 *(limited qty)*	*(Response)*	17, 28 *(index)*
43	2	Analog Output Command Event - 16-bit without time			*(Unsol. Resp.)*	17, 28 *(index)*
43	3		1 *(read)*		*(Response)*	

		Analog Output Command Event - 32-bit with time		06 *(no range, or all)*, 07, 08 *(limited qty)*		17, 28 *(index)*
43	3	Analog Output Command Event - 32-bit with time			*(Unsol. Resp.)*	17, 28 *(index)*
43	4	Analog Output Command Event - 16-bit with time	1*(read)*	06 *(no range, or all)*, 07, 08 *(limited qty)*	*(Response)*	17, 28 *(index)*
43	4	Analog Output Command Event - 16-bit with time			*(Unsol. Resp.)*	17, 28 *(index)*
43	5	Analog Output Command Event - single-precision floating point without time	1*(read)*	06 *(no range, or all)*, 07, 08 *(limited qty)*	*(Response)*	17, 28 *(index)*
43	5	Analog Output Command Event - single-precision floating point without time			*(Unsol. Resp.)*	17, 28 *(index)*
43	7	Analog Output Command Event - single-precision floating point with time	1*(read)*	06 *(no range, or all)*, 07, 08 *(limited qty)*	*(Response)*	17, 28 *(index)*
43	7	Analog Output Command Event - single-precision floating point with time			*(Unsol. Resp.)*	17, 28 *(index)*
50	1	Time and Date - absolute time	1*(read)*	07 *(limited qty = 1)*	*(Response)*	07 *(limited qty = 1)*
50	1	Time and Date - absolute time	2*(write)*	07 *(limited qty = 1)*		
50	3	Time and Date - absolute time at last recorded time	2*(write)*	07 *(limited qty = 1)*		
51	1				*(Response)*	07 *(limited qty = 1)*

		Time and Date CTO - absolute time, synchronised				
51	1	Time and Date CTO - absolute time, synchronised			*(Unsol. Resp.)*	07 *(limited qty = 1)*
51	2	Time and Date CTO - absolute time, unsynchronised			*(Response)*	07 *(limited qty = 1)*
51	2	Time and Date CTO - absolute time, unsynchronised			*(Unsol. Resp.)*	07 *(limited qty = 1)*
52	1	Time Delay - coarse			*(Response)*	07 *(limited qty = 1)*
52	2	Time Delay - fine			*(Response)*	07 *(limited qty = 1)*
60	1	Class Objects - class 0 data	1*(read)*	06 *(no range, or all)*		
60	1	Class Objects - class 0 data	22*(assign class)*	06 *(no range, or all)*		
60	2	Class Objects - class 1 data	1*(read)*	06 *(no range, or all)*, 07, 08 *(limited qty)*		
60	2	Class Objects - class 1 data	20*(enable unsol.)*	06 *(no range, or all)*		
60	2	Class Objects - class 1 data	21*(disable unsol.)*	06 *(no range, or all)*		
60	2	Class Objects - class 1 data	22*(assign class)*	06 *(no range, or all)*		
60	3	Class Objects - class 2 data	1*(read)*	06 *(no range, or all)*, 07, 08 *(limited qty)*		
60	3	Class Objects - class 2 data	20*(enable unsol.)*	06 *(no range, or all)*		
60	3					

		Class Objects - class 2 data	21*(disable unsol.)*	06 *(no range, or all)*		
60	3	Class Objects - class 2 data	22*(assign class)*	06 *(no range, or all)*		
60	4	Class Objects - class 3 data	1*(read)*	06 *(no range, or all)*, 07, 08 *(limited qty)*		
60	4	Class Objects - class 3 data	20*(enable unsol.)*	06 *(no range, or all)*		
60	4	Class Objects - class 3 data	21*(disable unsol.)*	06 *(no range, or all)*		
60	4	Class Objects - class 3 data	22*(assign class)*	06 *(no range, or all)*		
70	2	File - Authentication (Not Supported)	29 *(authenticate file)*	5B *(Cnt = 1)*	*(Response)*	5B *(Cnt = 1)*
70	3	File - Command	25*(open file)*	5B *(Cnt = 1)*		
70	3	File - Command	27*(delete file)*	5B *(Cnt = 1)*		
70	4	File - Command Status	26*(close file)*	5B *(Cnt = 1)*	*(Response)*	5B *(Cnt = 1)*
70	4	File - Command Status	30*(abort file)*	5B *(Cnt = 1)*	*(Response)*	5B *(Cnt = 1)*
70	5	File - Transport	1*(read)*	5B *(Cnt = 1)*	*(Response)*	5B *(Cnt = 1)*
70	5	File - Transport	2*(write)*	5B *(Cnt = 1)*	*(Response)*	5B *(Cnt = 1)*
70	6	File - Transport Status			*(Response)*	5B *(Cnt = 1)*
70	7	File - Descriptor	28*(get file info)*	5B *(Cnt = 1)*	*(Response)*	5B *(Cnt = 1)*
80	1	Internal Indications - packed format	1*(read)*	00, 01 *(start-stop)*	*(Response)*	00 *(start-stop)*
80	1	Internal Indications - clear IIN1.4 - NEED_TIME	2*(write)*	00 *(start-stop) (Index=4)*		
80	1		2*(write)*			

		Internal Indications - clear IIN1.7 - DEVICE_RESTART		00 *(start-stop) (Index=7)*		
91	1	Status of Requested Operation - Activate configuration			*(Response)*	5B
110	string length	Octet String	1*(read)*	00, 01 *(start-stop)*		
110	string length	Octet String	2*(write)*	00, 01 *(start-stop)*		
110	string length	Octet String	31*(activate config)*	5B		
112	string length	Virtual Terminal - Output Block	2*(write)*	00, 17 *(index)*		
113	string length	Virtual Terminal - Event Data	1*(read)*	00, 17 *(index)*	*(Response)*	17 *(index)*
120	1	Authentication Challenge	32*(auth req)*	5B	*(Auth. Resp.)*	5B
120	2	Authentication Reply	32*(auth req)*	5B	*(Auth. Resp.)*	5B
120	3	Authentication Aggresive Mode Request	any of 1 to 31	07 *(limited qty = 1)*	*(Response)*	07 *(limited qty = 1)*
120	3	Authentication Aggresive Mode Request			*(Unsol. Resp.)*	07 *(limited qty = 1)*
120	4	Session Key Status Request	32*(auth req)*	07 *(limited qty = 1)*		
120	5	Session Key Status			*(Auth. Resp.)*	5B
120	6	Session Key Change	32*(auth req)*	5B		
120	7	Authentication Error	33*(auth req, no ack)*	5B	*(Auth. Resp.)*	5B
120	9	Hashed Message Authentication Code (HMAC)	any of 1 to 31	5B	*(Response)*	5B
120	9	Hashed Message Authentication Code (HMAC)			*(Unsol. Resp.)*	5B
No object (function code only)			0*(confirm)*			
No object (function code only)			13*(cold restart)*			
No object (function code only)						

	14*(warm restart)*			
No object (function code only)	23*(delay meas.)*			
No object (function code only)	24*(record current time)*			

5 Data Points List (outstation only)

This part of the Device Profile shows, for each data type, a table defining the data points available in the device or a description of how this information can be obtained if the database is configurable.

5.1 Definition of Binary Input Point List: *List of addressable points. Points that do not exist (for example, because an option is not installed) are omitted from the table.* *Note: the number of binary inputs present in the device, and the maximum binary input index, are available remotely using object Group 0 Variations 239 and 238.*	☐ Fixed, list shown in table below ☑ Configurable (current list may be shown in table below) ☐ Other, explain:

Binary Input points list:

Point Index	Name	Event Class Assigned (1, 2, 3 or none)	Name for State when value is 0	Name for State when value is 1	Description
0	Binary Input 0	1	off	on	Example Configurable Binary Input Point

5.2 Definition of Double-bit Input Point List: *List of addressable points. Points that do not exist (for example, because an option is not installed) are omitted from the table.* *Note: the number of double-bit inputs present in the device, and the maximum double-bit input index, are available remotely using object Group 0 Variations 236 and 235.*	☐ Fixed, list shown in table below ☐ Configurable (current list may be shown in table below) ☐Other, explain:

This section is not included in this Profile.

5.3 Definition of Binary Output Status / Control Relay Output Block Points List: *List of addressable points. Points that do not exist (for example, because an option is not installed) are omitted from the table.* *Note: the number of binary outputs present in the device, and the maximum binary output index, are available remotely using object Group 0 Variations 224 and 223.*	☐ Fixed, list shown in table below ☑ Configurable (current list may be shown in table below) ☐Other, explain: Note: Pulse On-Trip/Close controls support Activation (two point) model only

Binary Output Status and CROB points list:

		Supported Control Operations																	
																	Event Class Assigned (1,2,3 or none)		
Point Index	Name	Select/Operate	Direct Operate	Direct Operate - No Ack	Pulse On	Pulse Off	Latch On	Latch Off	Trip	Close	Count > 1	Cancel Currently Running Operation	Name for State when value is 0	Name for State when value is 1	Change	Command	Description

0	Binary Output 0	Y	Y	Y	Y	Y	Y	Y	Y	Y	Y	Y	off	on	2		Example Configurable Binary Output Point

5.4 Definition of Counter / Frozen Counter Point List: *List of addressable points. Points that do not exist (for example, because an option is not installed) are omitted from the table.* *Note: the number of counters present in the device, and the maximum counter index, are available remotely using object Group 0 Variations 229 and 228.*	☐ Fixed, list shown in table below ☑ Configurable (current list may be shown in table below) ☐ Other, explain:

Counter / Frozen Counter points list:

Point Index	Name	Event Class Assigned to Counter Events (1, 2,	Frozen Counter Exists (Yes or No)	Event Class Assigned to Frozen Counter Events	Description

29	Counter Input 29	2	N		Example Counter Input point configurable for 16-bit or 32-bit variation

5.5 Definition of Analog Input Point List: *List of addressable points. Points that do not exist (for example, because an option is not installed) are omitted from the table.* *Note: the number of analog inputs present in the device, and the maximum analog input index, are available remotely using object Group 0 Variations 233 and 232.*	☐ Fixed, list shown in table below ☑ Configurable (current list may be shown in table below) ☐ Other, explain: Note: All points can be selected for 16-bit, 32-bit or Short Float variation

Analog Input points list:

.					Transmitted Value		Scaling				.
Point Index	Name	Event Class Assigned (1	Frozen Analog Exists (Y	Event Class Assigned to	Min int / flt	Max int / flt	Multiplier	Offset	Units	Resolution	Description

0	Analog Input 0	1			-32768	+32767					Example Analog Input point configured for 16-bit integer variation
1	Analog Input 1	3			-2147483648	+2147483647					Example Analog Input point configired for 32-bit integer variation
2	Analog Input 2	none			-3.402823e+38	+3.402823e+38					Example Analog Input point configured for single precision floating point variation

5.6 Definition of Analog Output Status / Analog Output Block Point List: *List of addressable points. Points that do not exist (for example, because an option is not installed) are omitted from the table.* *Note: the number of analog outputs present in the device, and the maximum analog output index, are available remotely using object Group 0 Variations 221 and 220.*	☐ Fixed, list shown in table below ☑ Configurable (current list may be shown in table below) ☐ Other, explain: Note: All points can be selected for 16-bit, 32-bit or Short Float variation

Analog Output points list:

.		Supported Control Operations			Transmitted Value		Scaling		.		Event Class Assigned (1, 2, 3 or none)		.
Point Index	Name	Select/Operate	Direct Operate	Direct Operate - No Ack	Min	Max	Min	Max	Units	Resolution	Change	Command	Description
0	Analog Output 0	Y	Y	Y	-32768	+32767					2		Example Analog Output point configured for 16-bit integer variation
1	Analog Output 1	Y	Y	Y	-2147483648	+2147483647					3		Example Analog Output point configured for 32-bit integer variation
2	Analog Output 2	Y	Y	Y	-3.402823e+38	+3.402823e+38					none		Example Analog Output point configured

													for single precision floating point variation

5.7 Definition of File Names that may be read or written:	☑ Fixed, list shown in table below ☑ Configurable (current list may be shown in table below) ☐ Other, explain:

Sequential Files list:

.		Authentication Required for:			.
File Name	Event Class Assigned (1, 2, 3 or none)	Read	Write	Delete	Description
/	none				This is the main directory
DEVICEDIAG.LOG	none				Diagnostic stream captured to file. Use FILEDIAG command to start/stop diagnostic stream capture
CONFIG.LOG	none				Configuration log file from procesing of the most recently loaded configuration
SEC.LOG	none				Security log file from procesing of the most recently loaded security configuration
SCADAPackInfo.TXT	none				Device information file showing system status for diagnostics
*.RTZ	none				Full Configuration + logic loaded into outstation
*.???	none				System Firmware file
*.???	none				Bootloader Firmware file
*.BIN	none				I/O module Firmware file
SYS_*	none				Reserved system file names
/Logic	none				This is a directory containing SCADAPack x70 Logic files - DO NOT DELETE
/Logic/TEST.LOG	none				Logic operational log file

5.8 Definition of Octet String and Extended Octet String Point List: *List of addressable points. Points that do not exist (for example, because an option is not installed) are omitted from the table.*	☐ Fixed, list shown in table below ☐ Configurable (current list may be shown in table below) ☐Other, explain:

Octet String and Extended Octet String points list:

Point Index	Name	Event Class Assigned (1, 2, 3 or none)	Group Number used to transport the object	Description

5.9 Definition of Virtual Terminal Port Numbers: *List of addressable points. Points that do not exist (for example, because an option is not installed) are omitted from the table.*	☑ Fixed, list shown in table below ☐ Configurable (current list may be shown in table below) ☐Other, explain:

Ports list:

Virtual Port Number (Point Index)	Name	Event Class Assigned (1, 2, 3 or none)	Description
20	Command Line	none	Remote command line interface

5.10 Definition of Data Set Prototypes: *List of all data set prototypes. The following table is repeated for each Data Set Prototype defined.* *Note: the number of data set prototypes known to the device are available remotely*	☐ Fixed, list shown in table below ☐ Configurable (current list may be shown in table below) ☐Other, explain:

using object Group 0 Variations 212 and 213.	

This section is not included in this Profile.

5.11 Definition of Data Set Descriptors: *List of all data set descriptors. The following table is repeated for each Data Set Descriptor defined.* *Note: the number of data sets known to the device are available remotely using object Group 0 Variations 214 and 215.*	☐ Fixed, list shown in table below ☐ Configurable (current list may be shown in table below) ☐Other, explain:

This section is not included in this Profile.

5.12 Data Set Descriptors - Point Index Attributes *The following table is optional and correlates data set elements to point indexes of standard DNP3 Data Objects. The element number below refers to the position in the present value object (object 87) or event (object 88) data set and will not match the element number in the data set descriptor or data set prototype tables above.*

This section is not included in this Profile.

---------- End of Device Profile for Reference Device ----------

---------- End of Complete Device Profile ----------

DNP3 Device Profile
Based on DNP XML Schema version 2.11.00

Document Name: SCADAPack 57x RTU DNP3 Master Capabilities XML Device Profile

Document Description: Master Capabilities Device Profile for Schneider Electric SCADAPack 570, SCADAPack 574, SCADAPack 575 RTU

Revision History

Date	Time	Version	Reason for change	Edited by
2016-11-30		1	XML Master Device Profile first version	Metin Ozturk
2017-06-23		2	Updated device profile to DNP XML Schema v2.11.00 (2016); editorial corrections; current (default) value updates; 1.1.10 configuration software name (SCADAPack x70 RemoteConnect); 1.2 port names updated; 1.2.4 hardware flow control updates; 1.3.1 port names updated; 1.3.3 default IP; 1.13 Broacast disabled	Philip Aubin
2017-07-13		3	Updated g80v1 Master request to show Index 7; removed Master parsed response for g80v1; updated device profile, firmware and hardware version numbers	Philip Aubin
2017-11-09		4	Updated 1.3.6 Added TCP/UDP connection limits based on list of IP addresses or list of wildcard IP addresses now supported with IP Whitelist; 1.1.3 added SCADAPack 574 support; software tool added where missing for configurable fields	Philip Aubin

Date	Time	Version	Reason for change	Edited by
2018-06-25		5	1.1.9 and 4. Removed g10v1 write not supported	Philip Aubin
2018-12-12		6	1.1.10 added ClearSCADA to configuration software and removed Protocol - Set via DNP3 since this is a DNP3 slave capability; 1.12.15 removed addititional critical function codes as the SCADAPack DNP3 master does not generate these; 4. Corrected g120v3 qualifier to 07 (Qty 1), added missing g120v1 and g120v7 Response and Unsol. Resp. function codes, added missing No Object (function code only) support for 0 (Confirm); editorial corrections	Philip Aubin
2019-08-01		7	1.1.10 relabelled ClearSCADA to EcoStruxure Geo SCADA Expert; 1.2.4 clarified hardware flow control and RS485 ports; 1.2.6,1.4.6,1.4.7 added "None" options valid for SCADAPack; 1.5.5,1.5.6 maximum objects in a control request limited by fragment	Philip Aubin
2020-12-21		8	1.1.4,1.1.5,1.1.10 updated version information; 1.12.1 documented DNP-SA config method via USB stick or Geo SCADA Expert; 1.12.16 removed unrelated critical fragments	Philip Aubin

REFERENCE DEVICE:

1 Device Properties

This document is intended to be used for several purposes, including:

- Identifying the capabilities of a DNP3 device (Master Station or Outstation)

- Recording the settings of a specific instance of a device (parameter settings for a specific instance of the device in the user's total DNP3 estate)

- Matching user requirements to product capabilities when procuring a DNP3 device

The document is therefore structured to show, for each technical feature, the capabilities of

the device (or capabilities required by the device when procuring).

It is also structured to show the current value (or setting) of each of the parameters that describe a specific instance of the device. This "current value" may also show a functional limitation of the device. For example when implementing secure authentication it is not required that all DNP3 devices accept aggressive mode requests during critical exchanges (see Device Profile 1.12.4), in which case a vendor would mark this current value as "No - does not accept aggressive mode requests".

Additionally, the current value may sometimes be used to show a value that a device can achieve because of hardware or software dependencies. Users should note that if an entry in the capabilities column of the Device Profile is grayed-out then there may be information in the current value column that is pertinent to the device's capabilities.

Unless otherwise noted, multiple boxes in the second column below are selected for each parameter to indicate all capabilities supported or required. Parameters without checkboxes in the second column do not have capabilities and are included so that the current value may be shown in the third column.

The items listed in the capabilities column below may be configurable to any of the options selected, or set to a fixed value when the device was designed. Item 1.1.10 contains a list of abbreviations for the possible ways in which the configurable parameters may be set. Since some parameters may not be accessible by each of these methods supported, an abbreviation for the configuration method supported by each parameter is shown in the fourth column of the tables below.

If this document is used to show the current values, the third column should be filled in even if a fixed parameter is selected in the capabilities section ("N/A" may be entered for parameters that are Not Applicable).

If the document is used to show the current values of parameters, then column 3 applies to a single connection between a master and an outstation.

1.1 DEVICE IDENTIFICATION	**Capabilities**	**Current Value**	**If configurable list methods**
1.1.1 Device Function: *Masters send DNP requests, while Outstations send DNP responses. If a single physical device can perform both functions, a*	◉ Master ○ Outstation	◉ Master ○ Outstation	

separate Device Profile Document must be provided for each function.			
1.1.2 Vendor Name: *The name of the organization producing the device.* *Note: The current value of this outstation parameter is available remotely using protocol object Group 0 Variation 252.*		Schneider Electric	
1.1.3 Device Name: *The model and name of the device, sufficient to distinguish it from any other device from the same organization.* *Note: The current value of this outstation parameter is available remotely using protocol object Group 0 Variation 250.*		SCADAPack 570; SCADAPack 574; SCADAPack 575	
1.1.4 Device manufacturer's hardware version string:		5.0	

Note: The current value of this outstation parameter is available remotely using protocol object Group 0 Variation 243.			
1.1.5 Device manufacturer's software version string: *Note: The current value of this outstation parameter is available remotely using protocol object Group 0 Variation 242.*		SCADAPack x70 Firmware R2.5.1 (9.5.1)	
1.1.6 Device Profile Document Version Number: *Version of the Device Profile Document is indicated by a whole number incremented with each new release. This should match the latest version shown in the Revision History at the beginning of this document.*		8	
1.1.7 DNP Levels Supported for: *Indicate each DNP3 Level to which the device*	Masters Only Requests Responses ☐ ☐ None ☐ ☐ Level 1 ☑ ☐ Level 2 ☐ ☑ Level 3	For requests: Level 2 For responses: Level 3	

conforms fully. For Masters, requests and responses can be indicated independently.	☐ ☐ Level 4		
1.1.8 Supported Function Blocks:	☐ Self Address Support ☐ Data Sets ☐ File Transfer ☐ Virtual Terminal ☐ Mapping to IEC 61850 Object Models defined in a DNP3 XML file ☐ Function code 31, activate configuration ☑ Secure Authentication (if checked then see 1.12)		
1.1.9 Notable Additions: *A brief description intended to quickly identify (for the reader) the most obvious features the device supports in addition to the Highest DNP Level Supported. The complete list of features is described in the Implementation Table.*	Function Code 14 Warm Restart Qualifier 00, 01 Read requests Group 11 Binary Output Events Group 13 Binary Output Command Events Group 22 Var 5 32-bit Counter Change Event with Time Group 22 Var 6 16-bit Counter Change Event with Time Group 41 Analog Output Events Group 42 Analog Output Command Events		
1.1.10 Methods to set Configurable Parameters:	☐ XML - Loaded via DNP3 File Transfer ☐ XML - Loaded via other transport mechanism ☐ Terminal - ASCII Terminal Command Line ☑ Software - Vendor software named SCADAPack x70 RemoteConnect R2.5.1 (3.8.1) ☑ Software - Vendor software		

	named EcoStruxure Geo SCADA Expert 2019 and later ☑ Proprietary file loaded via DNP3 File Transfer ☑ Proprietary file loaded via other transport mechanism ☐ Direct - Keypad on device front panel ☐ Factory - Specified when device is ordered ☐ Protocol - Set via DNP3 (e.g. assign class) ☐ Other - explain:		
1.1.11 DNP3 XML files available On-line: *XML configuration file names that can be read or written through DNP3 File Transfer to a device.* *A device's currently running configuration is returned by DNP3 on-line XML file read from the device.* *DNP3 on-line XML file write to a device will update the device's configuration when the Activate Configuration (function code 31) is received.*	Rd Wr Filename / Description of Contents ☐ dnpDP.xml — Complete Device Profile ☐ dnpDPCap.xml — Device Profile Capabilities ☐ dnpDPCfg.xml — Device Profile config values	Rd Wr Filename ☐ dnpDP.xml ☐ dnpDPCap.xml ☐ dnpDPCfg.xml	
1.1.12 External DNP3 XML files available Off-line:	Rd Wr Filename / Description of Contents ☐ ☐ dnpDP.xml	Rd Wr Filename ☐ ☐ dnpDP.xml ☐ ☐ dnpDPCap.xml ☐ ☐ dnpDPCfg.xml	

XML configuration file names that can be read or written from an external system, typically from a system that maintains the outstation configuration. *External off-line XML file read permits an XML definition of a new configuration to be supplied from off-line configuration tools.* *External off-line XML file write permits an XML definition of a new configuration to be supplied to off-line configuration tools.*	☐ ☐ dnpDPCap.xml Complete Device Profile Device Profile Capabilities ☐ ☐ dnpDPCfg.xml Device Profile config values ☑ ☐ "SCADAPack57xMaster.xml" Complete Device Profile Document		
1.1.13 Connections Supported:	☑ Serial (complete section 1.2) ☑ IP Networking (complete section 1.3) ☑ Other, explain **USB (RNDIS)**		

1.2 SERIAL CONNECTIONS	**Capabilities**	**Current Value**	**If configurable list methods**
1.2.1 Port Name: *Name used to reference the communications port defined in this section.*		Serial1, Serial2, Serial3, Serial4	
1.2.2 Serial Connection Parameters:	☑ Asynchronous - 8 Data Bits, 1 Start Bit, 1 Stop Bit,		software **SCADAPack**

	No Parity ☑ Other, explain **The port can also be configured to use: 8 bits ODD Parity, 8 bits EVEN parity, 8 bits No Parity 2 STOP Bits**		**x70 RemoteConnect** ----------
1.2.3 Baud Rate:	☐ Fixed at ☐ Configurable, range to ☑ Configurable, selectable from **300**, **600**, **1200**, **2400**, **4800**, **9600**, **19200**, **38400**, **57600**, **115200** ☐ Configurable, other, describe	9600 Note: This is the default setting	software **SCADAPack x70 RemoteConnect** ----------
1.2.4 Hardware Flow Control (Handshaking): *Describe hardware signaling requirements of the interface.* *Where a transmitter or receiver is inhibited until a given control signal is asserted, it is considered to require that signal prior to sending or receiving characters.* *Where a signal is asserted prior to transmitting, that signal will be maintained active until after the end of transmission.* *Where a signal is asserted to enable reception, any data sent to the device when the signal is not active could be discarded.*	☑ None **RS-232 / V.24 / V.28 Options:** Asserts: ☑ RTS Before Tx ☐ DTR Before Tx ☐ RTS Before Rx ☐ DTR Before Rx ☑ Always RTS ☐ Always DTR Requires Before Tx: CTS ☐ Asserted ☐ Deasserted DCD ☐ Asserted ☐ Deasserted DSR ☐ Asserted ☐ Deasserted RI ☐ Asserted ☐ Deasserted ☐ Requires Rx Inactive before Tx Requires Before Rx: CTS ☐ Asserted ☐ Deasserted DCD ☐ Asserted ☐ Deasserted DSR ☐ Asserted ☐ Deasserted RI ☐ Asserted ☐ Deasserted Always Ignores: ☐ CTS ☐ DCD	None Note: This is the default setting	software **SCADAPack x70 RemoteConnect** ----------

	☑ DSR ☑ RI ☐ Other, explain **RS-485 Options:** ☑ Requires Rx inactive before Tx ☐ Other, explain Note: Hardware Flow Control is configurable on Serial1, Serial2. See device documentation for available modes Note: RS485 is configurable on Serial3, Serial4		
1.2.5 Interval to Request Link Status: *Indicates how often to send Data Link Layer status requests on a serial connection. This parameter is separate from the TCP Keep-alive timer.*	☑ Not Supported ☐ Fixed at seconds ☐ Configurable, range to seconds ☐ Configurable, selectable from seconds ☐ Configurable, other, describe	Not Supported	
1.2.6 Supports DNP3 Collision Avoidance: *Indicates whether an Outstation uses a collision avoidance algorithm.* *Collision avoidance may be implemented by a back-off timer with two parameters that define the back-off time range or by some other vendor-specific mechanism.* *The recommended back-off time is specified as being a fixed minimum delay plus a random delay, where the random delay has a*	☑ No ☑ Yes, using Back-off time = (Min + Random) method Minimum Back-off time: ☐ Fixed at ms ☑ Configurable, range **0** to **65535**ms ☐ Configurable, selectable from ms ☐ Configurable, other, describe Maximum Random Back-off time	No Note: This is the default setting	software **SCADAPack x70 RemoteConnect** ----------

maximum value specified. This defines a range of delay times that are randomly distributed between the minimum value and the minimum plus the maximum of the random value. *If a back-off timer is implemented with only a fixed or only a random value, select the Back-off time method and set the parameter that is not supported to "Fixed at 0 ms".*	component: ☐ Fixed at ms ☑ Configurable, range **0** to **65535**ms ☐ Configurable, selectable from ms ☐ Configurable, other, describe ☑ Other, explain **Via the RS232 CTS signal (when configured)**		
1.2.7 Receiver Inter-character Timeout: *When serial interfaces with asynchronous character framing are used, this parameter indicates if the receiver makes a check for gaps between characters. (i.e. extensions of the stop bit time of one character prior to the start bit of the following character within a message). If the receiver performs this check and the timeout is exceeded then the receiver discards the current data link frame. A receiver that does not discard data link frames on the basis of inter-character gaps is considered not to perform this check.* *Where no asynchronous serial interface is fitted this parameter is not applicable. In this case none of the options shall be selected.*	☑ Not Checked ☐ No gap permitted ☐ Fixed at bit times ☐ Fixed at ms ☐ Configurable, range to bit times ☐ Configurable, range to ms ☐ Configurable, selectable from bit times ☐ Configurable, selectable from ms ☐ Configurable, other, describe ☐ Variable, explain	Not Checked	
1.2.8 Inter-character gaps in transmission:	☐ None (always transmits with no inter-character gap)	1 ms	

When serial interfaces with asynchronous character framing are used, this parameter indicates whether extra delay is ever introduced between characters in the message, and if so, the maximum width of the gap. *Where no asynchronous serial interface is fitted this parameter is not applicable. In this case none of the options shall be selected.*	☐ Maximumbit times ☑ Maximum**1**ms		

1.3 IP NETWORKING	**Capabilities**	**Current Value**	**If configurable list methods**
1.3.1 Port Name: *Name used to reference the communications port defined in this section.*		Eth1, Eth2, Eth3, Serial1 (PPP/TCPIP), Serial2 (PPP/TCPIP)	
1.3.2 Type of End Point:	☑ TCP Initiating ☐ TCP Listening ☑ TCP Dual ☑ UDP Datagram		software **SCADAPack x70 RemoteConnect** ----------
1.3.3 IP Address of this Device:		172.16.1.200 Note: This is the default setting for Eth1	software **SCADAPack x70 RemoteConnect** ----------
1.3.4 Subnet Mask:		255.255.255.0 Note: This is the default setting for Eth1	software **SCADAPack x70 RemoteConnect** ----------
1.3.5 Gateway IP Address:			software **SCADAPack x70 RemoteConnect**

1.3.6 Accepts TCP Connections or UDP Datagrams from:	☑ Allows all (show as *.*.*.* in 1.3.7) ☐ Limits based on IP address ☑ Limits based on list of IP addresses ☐ Limits based on a wildcard IP address ☑ Limits based on list of wildcard IP addresses ☐ Other, explain	Allows all Note: This is the default setting	software **SCADAPack x70 RemoteConnect** ----------
1.3.7 IP Address(es) from which TCP Connections or UDP Datagrams are accepted:		*.*.*.*	
1.3.8 TCP Listen Port Number: *If Outstation or dual end point Master, port number on which to listen for incoming TCP connect requests. Required to be configureable for Masters and recommended to be configurable for Outstations.*	☐ Not Applicable (Master w/o dual end point) ☐ Fixed at 20,000 ☑ Configurable, range **0** to **65535** ☐ Configurable, selectable from ☐ Configurable, other, describe	20000 Note: This is the default setting	software **SCADAPack x70 RemoteConnect** ----------
1.3.9 TCP Listen Port Number of remote device: *If Master or dual end point Outstation, port number on remote device with which to initiate connection. Required to be configurable for Masters and recommended to be configurable for Outstations.*	☐ Not Applicable (Outstation w/o dual end point) ☐ Fixed at 20,000 ☑ Configurable, range **0** to **65535** ☐ Configurable, selectable from ☐ Configurable, other, describe	20000 Note: This is the default setting	software **SCADAPack x70 RemoteConnect** ----------
1.3.10 TCP Keep-alive timer: *The time period for the keep-alive timer on active TCP connections.*	☐ Timer Disabled ☐ Fixed at ms ☑ Configurable, range **0** to **65535000**ms ☐ Configurable,	1150000 ms Note: This is the default setting	software **SCADAPack x70 RemoteConnect** ----------

	selectable from ms ☐ Configurable, other, describe Note: This is configurable in units of seconds		
1.3.11 Local UDP port: *Local UDP port for sending and/or receiving UDP datagrams. Masters may let system choose an available port. Outstations must use one that is known by the Master.*	☐ Fixed at 20,000 ☑ Configurable, range **0** to **65535** ☐ Configurable, selectable from ☐ Configurable, other, describe ☐ Let system choose (Master only)	20000 Note: Same as 1.3.8 Listen Port Setting. This is the default setting	software **SCADAPack x70 RemoteConnect** ----------
1.3.12 Destination UDP port for DNP3 Requests (Masters Only):	☐ Fixed at 20,000 ☑ Configurable, range **0** to **65535** ☐ Configurable, selectable from ☐ Configurable, other, describe	20000 Note: This is the default setting	software **SCADAPack x70 RemoteConnect** ----------
1.3.13 Destination UDP port for initial unsolicited null responses (UDP only Outstations): *The destination UDP port for sending initial unsolicited Null response.*	☐ None ☐ Fixed at 20,000 ☐ Configurable, range to ☐ Configurable, selectable from ☐ Configurable, other, describe Note: Not applicable		
1.3.14 Destination UDP port for responses (UDP only Outstations): *The destination UDP port for sending all responses other than the initial unsolicited Null response.*	☐ None ☐ Fixed at 20,000 ☐ Configurable, range to ☐ Configurable, selectable from ☐ Configurable, other, describe ☐ Use local port number (as specified in 1.3.11) Note: Not applicable		
1.3.15 Multiple outstation connections (Masters only):	☑ Supports multiple outstations (Masters only)		

Indicates whether multiple outstation connections are supported.			
1.3.16 Multiple master connections (Outstations only): *Indicates whether multiple master connections are supported and the method that can be used to establish connections.*	☐ Supports multiple masters (Outstations only) If supported, the following methods may be used: ☐ Method 1 (based on IP address) - required ☐ Method 2 (based on IP port number) - recommended ☐ Method 3 (browsing for static data) - optional Note: Not applicable		
1.3.17 Time synchronization support:	☐ DNP3 LAN procedure (function code 24) ☑ DNP3 Write Time (not recommended over LAN) ☐ Other, explain ☐ Not Supported		

1.4 LINK LAYER	**Capabilities**	**Current Value**	**If configurable list methods**
1.4.1 Data Link Address: *Indicates if the link address is configurable over the entire valid range of 0 to 65,519. Data link addresses 0xFFF0 through 0xFFFF are reserved for broadcast or other special purposes.*	☐ Fixed at ☑ Configurable, range **0** to **65519** ☐ Configurable, selectable from ☐ Configurable, other, describe	0 Note: This is the default setting	software **SCADAPack x70 RemoteConnect** ----------
1.4.2 DNP3 Source Address Validation: *Indicates whether the Outstation will filter out requests not from a specific source address.*	☑ Never ☐ Always, one address allowed (shown in 1.4.3) ☐ Always, any one of multiple addresses allowed (each selectable as shown in 1.4.3) ☐ Sometimes, explain	Never	

1.4.3 DNP3 Source Address (es) expected when Validation is Enabled: *Selects the allowed source address(es)*	☐ Configurable to any 16 bit DNP Data Link Address value ☐ Configurable, range to ☐ Configurable, selectable from ☐ Configurable, other, describe Note: Not applicable		
1.4.4 Self Address Support using address 0xFFFC: *If an Outstation receives a message with a destination address of 0xFFFC it shall respond normally with its own source address. It must be possible to diasble this feature if supported.*	☐ Yes (only allowed if configurable) ☑ No	No	
1.4.5 Sends Confirmed User Data Frames: *A list of conditions under which the device transmits confirmed link layer services (TEST_LINK_STATES, RESET_LINK_STATES, CONFIRMED_USER_DATA).*	☑ Never ☑ Always ☑ Sometimes, explain **On multi-frame responses**	Never	software **SCADAPack x70 RemoteConnect** ----------
1.4.6 Data Link Layer Confirmation Timeout: *This timeout applies to any secondary data link message that requires a confirm or response (link reset, link status, user data, etc).*	☑ None ☐ Fixed at ms ☑ Configurable, range **0** to **65535000**ms ☐ Configurable, selectable from ms ☐ Configurable, other, describe ☐ Variable, explain Note: This is configurable in units of seconds	None Note: This is the default setting	software **SCADAPack x70 RemoteConnect** ----------
1.4.7 Maximum Data Link Retries:	☑ None ☐ Fixed at ☑ Configurable, range **0** to **65535**	None Note: This is the default setting	software **SCADAPack x70 RemoteConnect**

The number of times the device will retransmit a frame that requests Link Layer confirmation.	☐ Configurable, selectable from ☐ Configurable, other, describe		----------
1.4.8 Maximum number of octets Transmitted in a Data Link Frame: *This number includes the CRCs. With a length field of 255, the maximum size would be 292.*	☐ Fixed at ☑ Configurable, range **14** to **292** ☐ Configurable, selectable from ☐ Configurable, other, describe	292 Note: This is the default setting	software **SCADAPack x70 RemoteConnect** ----------
1.4.9 Maximum number of octets that can be Received in a Data Link Frame: *This number includes the CRCs. With a field length of 255, the maximum size would be 292. The device must be able to receive 292 octets to be compliant.*	☑ Fixed at **292** ☐ Configurable, range to ☐ Configurable, selectable from ☐ Configurable, other, describe	292	

1.5 APPLICATION LAYER	**Capabilities**	**Current Value**	**If configurable list methods**
1.5.1 Maximum number of octets Transmitted in an Application Layer Fragment other than File Transfer: *This size does not include any transport or frame octets.* *- Masters must provide a setting less than or equal to 249 to be compliant.* *- Outstations must provide a setting less than or equal to 2048 to be compliant.* *Note: The current value of this outstation parameter is available remotely using protocol object Group 0 Variation 240.*	☐ Fixed at ☑ Configurable, range **1** to **2048** ☐ Configurable, selectable from ☐ Configurable, other, describe	2048 Note: This is the default setting	software **SCADAPack x70 RemoteConnect** ----------

1.5.2 Maximum number of octets Transmitted in an Application Layer Fragment containing File Transfer:	☐ Same as 1.5.1 ☐ Fixed at ☐ Configurable, range to ☐ Configurable, selectable from ☐ Configurable, other, describe Note: Not applicable		
1.5.3 Maximum number of octets that can be received in an Application Layer Fragment: *This size does not include any transport or frame octets.* *- Masters must provide a setting greater than or equal to 2048 to be compliant.* *- Outstations must provide a setting greater than or equal to 249 to be compliant.* *Note: The current value of this outstation parameter is available remotely using protocol object Group 0 Variation 241.*	☑ Fixed at **2048** ☐ Configurable, range to ☐ Configurable, selectable from ☐ Configurable, other, describe	2048	
1.5.4 Timeout waiting for Complete Application Layer Fragment: *Timeout if all frames of a message fragment are not received in the specified time. Measured from time first frame of a fragment is received until the last frame is received.*	☐ None ☐ Fixed at ms ☑ Configurable, range **0** to **65535000**ms ☐ Configurable, selectable from ms ☐ Configurable, other, describe ☐ Variable, explain Note: This is configurable in units of seconds	24000ms Note: This is the default setting	software **SCADAPack x70 RemoteConnect** ----------
1.5.5 Maximum number of objects allowed in a single control request for CROB (Group 12):	☐ Fixed at (enter 0 if controls are not supported for CROB) ☐ Configurable, range to	Number of objects in a fragment	

Note: The current value of this outstation parameter is available remotely using protocol object Group 0 Variation 216.	☐ Configurable, selectable from ☐ Configurable, other, describe ☐ Variable, explain ☑ The number of objects that can be contained in a fragment (as specified in 1.5.3)		
1.5.6 Maximum number of objects allowed in a single control request for Analog Outputs (Group 41):	☐ Fixed at (enter 0 if controls are not supported for Analog Outputs) ☐ Configurable, range to ☐ Configurable, selectable from ☐ Configurable, other, describe ☐ Variable, explain ☑ The number of objects that can be contained in a fragment (as specified in 1.5.3)	Number of objects in a fragment	
1.5.7 Maximum number of objects allowed in a single control request for Data Sets (Groups 85, 86, 87):	☑ Fixed at **0**(enter 0 if controls are not supported for Data Sets) ☐ Configurable, range to ☐ Configurable, selectable from ☐ Configurable, other, describe ☐ Variable, explain ☐ The number of objects that can be contained in a fragment (as specified in 1.5.3)		
1.5.8 Supports mixed object groups (AOBs, CROBs and Data Sets) in the same control request:	☐ Not applicable - controls are not supported ☑ Yes ☐ No	Yes	

1.6 FILL OUT THE FOLLOWING ITEMS FOR MASTERS ONLY	**Capabilities**	**Current Value**	**If configurable list methods**
	☐ None ☐ Fixed at ms	24000ms	software **SCADAPack**

1.6.1 Timeout waiting for Complete Application Layer Responses (ms): *Timeout on Master if all fragments of a response message are not received in the specified time.*	☑ Configurable, range **0** to **65535000**ms ☐ Configurable, selectable from ms ☐ Configurable, other, describe ☐ Variable, explain Note: This is configurable in units of seconds	Note: This is the default setting	**x70 RemoteConnect** ----------
1.6.2 Maximum Application Layer Retries for Request Messages: *The number of times a Master will retransmit an application layer request message if a response is not received. This parameter must never cause a Master to retransmit time sync messages.*	☐ None ☐ Fixed at ☑ Configurable, range **0** to **65535** ☐ Configurable, selectable from ☐ Configurable, other, describe ☐ Variable, explain	1 Note: Configured as Application Layer Attempts. This is the default setting	software **SCADAPack x70 RemoteConnect** ----------
1.6.3 Timeout waiting for First or Next Fragment of an Application Layer Response: *Timeout between a request and the first fragment of a response, or between subsequent fragments of the same response, or between an Application Layer Confirmation and a subsequent fragment.*	☑ None ☐ Fixed at ms ☐ Configurable, range to ms ☐ Configurable, selectable from ms ☐ Configurable, other, describe ☐ Variable, explain		
1.6.4 Issuing controls to off-line devices: *Indicates if the Master issues control requests to devices that are thought to be off-line (i.e. the Master has not seen responses to previous Master requests).*	☐ Not applicable - controls are not supported ☐ Yes ☑ No		
1.6.5 Issuing controls to off-scan devices:	☐ Not applicable - controls are not supported ☐ Yes ☑ No		

Indicates if the Master issues control requests to devices that are currently off-scan (i.e. the Master has been configured not to issue poll requests to the device).			
1.6.6 Maximum Application Layer Retries for Control Select Messages (same sequence number): *Indicates the number of times a Master will retransmit an application layer control select request message if a response is not received - using the same message sequence number.*	☑ None (required) ☐ Fixed at ☐ Configurable, range to ☐ Configurable, selectable from ☐ Configurable, other, describe ☐ Variable, explain		
1.6.7 Maximum Application Layer Retries for Control Select Messages (new sequence number): *Indicates the number of times a Master will retransmit an application layer control select request message if a response is not received - using a new message sequence number.*	☑ None (required) ☐ Fixed at ☐ Configurable, range to ☐ Configurable, selectable from ☐ Configurable, other, describe ☐ Variable, explain		

1.7 FILL OUT THE FOLLOWING ITEMS FOR OUTSTATIONS ONLY	**Capabilities**	**Current Value**	**If configurable list methods**

1.8 OUTSTATION UNSOLICITED RESPONSE SUPPORT	**Capabilities**	**Current Value**	**If configurable list methods**

1.9 OUTSTATION UNSOLICITED RESPONSE TRIGGER CONDITIONS	**Capabilities**	**Current Value**	**If configurable list methods**

	Capabilities		

1.10 OUTSTATION PERFORMANCE		Current Value	If configurable list methods

1.11 INDIVIDUAL FIELD OUTSTATION PARAMETERS	Value of Current Setting	If configurable list methods

1.12 SECURITY PARAMETERS	Capabilities	Current Value	If configurable list methods
1.12.1 DNP3 device support for secure authentication: *The support for secure authentication is optional in DNP3 devices. Section 1.1.8 indicates if the device supports secure authentication.* *If the device does not support secure authentication then ignore the rest of this section.* *If the device does support secure authentication then specify the version(s) that are supported in the device. The version number is an integer value defined in the DNP3 Specification. The Secure Authentication procedure defined in IEEE 1815-2010 is version 2. The Secure Authentication procedure defined in IEEE 1815-2012 is version 5.*	Supported version (s): ☑ Fixed at **2** ☐ Configurable, selectable from	Version: 2 Note: Enabled through loading a Security Configuration	software **SCADAPack x70 RemoteConnect** ---------- other (USB memory stick, EcoStruxure Geo SCADA Expert)
1.12.2 Maximum number of users: *The secure authentication algorithm provides support for multiple users. The device must support details for each user (update keys, session keys, etc). A user is identified by a 16-bit user number, allowing a maximum of 65535 users. Devices are not mandated to support this number of potential users. Indicate here the actual limit to the number of*	☑ Fixed at **1 DNP3 Default User (1) supported** ☐ Configurable, range to	Maximum number of users supported: 1	

simultaneous users that can be supported.			
1.12.3 Security message response timeout: *Authentication of critical messages may involve additional message exchanges (challenges and responses) which can require an extension to the normal DNP3 message response timeout. This timeout specifies an additional time to be used when the extra security transactions are involved. The maximum allowable timeout extension should not exceed 120 seconds.*	☐ Fixed at ms ☑ Configurable, range **0** to **120000**ms ☐ Configurable, selectable from ms ☐ Configurable, other, describe	2000 ms Note: This is the default setting	software **SCADAPack x70 RemoteConnect** ----------
1.12.4 Aggressive mode of operation (receive): *DNP3 devices may (optionally) accept "aggressive" mode requests, where challenge data used for authentication is appended to a critical message rather than needing to be solicited via a separate message exchange.*		◉ Yes, accepts aggressive mode requests ○ No, does not accept aggressive mode requests Note: Configurable. This is the default setting	software **SCADAPack x70 Security Administrator** ----------
1.12.5 Aggressive mode of operation (issuing): *DNP3 devices must support the issuing of "aggressive" mode of operation, where challenge data used for authentication is appended to a critical message rather than needing to be solicited via a separate message exchange. Specific instances of devices may have the use of aggressive mode switched off.*		○ Yes, issues aggressive mode requests ◉ No, does not issue aggressive mode requests Note: Configurable. This is the default setting	software **SCADAPack x70 Security Administrator** ----------
	☑ Can be disabled		

1.12.6 Session key change interval: *To counter an attack that compromises the session key, the session key is changed by the master at regular intervals. Outstation devices invalidate the current set of session keys if they have not been changed by the master station after a period of twice this configured value.* *To accommodate systems with infrequent communications, this change interval can be disabled and just the session key change message count used (see 1.12.7)*	When enabled ☑ Configurable, range **1** to **1209600**seconds	Enabled 1800 seconds Note: This is the default setting	software **SCADAPack x70 Security Administrator** ----------
1.12.7 Session key change message count: *In addition to changing the session key at regular intervals, the key shall also be changed after a specified number of messages have been exchanged. The maximum allowable value for this message count is 10,000*	☑ Configurable, range **10** to **60000**	2000 Note: This is the default setting	software **SCADAPack x70 Security Administrator** ----------
1.12.8 Maximum error count (SAv2 only): *To assist in countering denial of service attacks, a DNP3 device shall stop replying with error codes after a number of successive authentication failures. This error count has a maximum value of 10. Setting the error count to zero inhibits all error messages.* *See 1.12.21 for error counts when using SAv5*	☐ Not applicable (not using SAv2) ☑ Configurable, range **0** to **10**	2 Note: This is the default setting	software **SCADAPack x70 Security Administrator** ----------
1.12.10 Key-wrap algorithm to encrypt session keys: *During the update of a session key, the key is encrypted using*	☑ AES-128 ☐ AES-256 ☐ Other, explain:	AES-128	software **SCADAPack x70 Security Administrator** ----------

AES-128 or optionally using other algorithms.			
1.12.11 Cipher Suites used with DNP implementations using TLS: *When TLS is supported, DNP3 Secure Authentication mandates the support of TLS_RSA_WITH_AES_128_SHA. The specification has a number of recommended cipher suite combinations. Indicate the supported Cipher Suites for implementations using TLS.*	☑ Not relevant - TLS is not used ☐ TLS_RSA encrypted with AES128 ☐ TLS_RSA encrypted with RC4_128 ☐ TLS_RSA encrypted with 3DES_EDE_CBC ☐ TLS_DH, signed with DSS, encrypted with 3DES_EDE_CBC ☐ TLS_DH, signed with RSA, encrypted with 3DES_EDE_CBC ☐ TLS_DHE, signed with DSS, encrypted with 3DES_EDE_CBC ☐ TLS_DHE, signed with RSA, encrypted with 3DES_EDE_CBC ☐ TLS_DH, signed with DSS, encrypted with AES128 ☐ TLS_DH, signed with DSS, encrypted with AES256 ☐ TLS_DH encrypted with AES128 ☐ TLS_DH encrypted with AES256 ☐ Other, explain:		
1.12.12 Change cipher request timeout: *Implementations using TLS shall terminate the connection if a*	☑ Not relevant - TLS is not used ☐ Fixed at ☐ Configurable, range to		

response to a change cipher request is not seen within this timeout period.	☐ Configurable, selectable from ☐ Configurable, other, describe		
1.12.13 Number of Certificate Authorities supported: *Implementations using TLS shall support at least 4 Certificate Authorities. Indicate the number supported.*			
1.12.14 Certificate Revocation check time: *Implementations using TLS shall evaluate Certificate Revocation Lists on a periodic basis, terminating a connection if a certificate is revoked.*	☑ Not relevant - TLS is not used ☐ Fixed at hours ☐ Configurable, range to hours ☐ Configurable, selectable from hours ☐ Configurable, other, describe		
1.12.15 Additional critical function codes: *The DNP3 specification defines those messages with specific function codes that are critical and must be used as part of a secure authentication message exchange. Messages with other function codes are optional and changes to this list should be noted here.* *Note: Secure Authentication version 5 defines additional functions as critical that were not considered critical in version 2. These are shown in the next column annotated with "V2 only".*	Additional function codes that are to be considered as "critical": ☐ 0 (Confirm) ☐ 1 (Read) ☐ 7 (Immediate freeze) ☐ 8 (Immediate freeze - no ack) ☐ 9 (Freeze-and-clear) ☐ 10 (Freeze-and-clear - no ack) ☐ 11 (Freeze-at-time) ☐ 12 (Freeze-at-time - no ack) ☐ 22 (Assign Class) ☐ 23 (Delay Measurement) ☐ 25 (Open File) - V2 only ☐ 26 (Close File) - V2 only		

	☐27 (Delete File) - V2 only ☐28 (Get File Info) - V2 only ☐30 (Abort File) - V2 only ☐129 (Response) ☐130 (Unsolicited Response)		
1.12.16 Other critical fragments: *Other critical transactions can be defined and should be detailed here. Examples could be based on time (for example: the first transaction after a communications session is established). Other examples could be based on specific data objects (for example: the reading of specific data points).*			

1.13 BROADCAST FUNCTIONALITY	**Capabilities**	**Current Value**	**If configurable list methods**
This section indicates which functions are supported by the device when using broadcast addresses. Note that this section shows only entries that may have a meaningful purpose when used with broadcast requests.			
1.13.1 Support for broadcast functionality:	◉ Disabled ○ Enabled ○ Configurable	Disabled	

2 Mapping to IEC 61850 Object Models

This optional section allows each configuration parameter or point in the DNP Data map to be tied to an attribute in the IEC 61850 object models.

Earlier versions of this section (up to version 2.07) used mappings based on an "access point" (section 2.1.1 and then a series of XPath references (section 2.1.2). Section 2.1.2 has

been superseded in version 2.08 onwards with mappings defined using either predefined rules (section 2.1.3) or specified as an equation (section 2.1.4). The list of pre-defined rules is found in the IEEE 1815-1 document.

TREE MPPING BETWEEN DNP3 AND IEC 61850 OBJECTS
2.1.3 Rule based mapping Use this element when mapping to/from iec61850 using one of the predefined rules in IEEE 1815.1 Mapping is bi-directional
This section is not included in this Profile.
2.1.4 Equation based mapping Use this element when mapping to/from iec61850 using an equation to map 0 or more input parameters to a single output parameter. Direction of mapping is determined by the variable on the left hand side of the equation.
This section is not included in this Profile.

3 Capabilities and Current Settings for Device Database (Outstation only)

The following tables identify the capabilities and current settings for each DNP3 data type. Details defining the data points available in the device are shown in part 5 of this Device Profile.

This section is not included in this Master Station Profile.

4 Implementation Table

The following implementation table identifies which object groups and variations, function codes and qualifiers the device supports in both requests and responses. The *Request* columns identify all requests that may be sent by a Master, or all requests that must be parsed by an Outstation. The *Response* columns identify all responses that must be parsed by a Master, or all responses that may be sent by an Outstation.

DNP OBJECT GROUP & VARIATION	REQUEST Master may issue	RESPONSE Master must parse

			Outstation must parse		Outstation may issue	
Object Group Number	**Variation Number**	**Description**	**Function Codes (dec)**	**Qualifier Codes (hex)**	**Function Codes (dec)**	**Qualifier Codes (hex)**
1	0	Binary Input - any variation	1 *(read)*	00, 01 *(start-stop)*		
1	1	Binary Input - Single-bit packed	1 *(read)*	00, 01 *(start-stop)*	*(Response)*	00, 01 *(start-stop)*
1	2	Binary Input - Single-bit with flag	1 *(read)*	00, 01 *(start-stop)*	*(Response)*	00, 01 *(start-stop)*
2	0	Binary Input Change Event - any variation				
2	1	Binary Input Change Event - without time			*(Response)*	17, 28 *(index)*
2	1	Binary Input Change Event - without time			*(Unsol. Resp.)*	17, 28 *(index)*
2	2	Binary Input Change Event - with absolute time			*(Response)*	17, 28 *(index)*
2	2	Binary Input Change Event - with absolute time			*(Unsol. Resp.)*	17, 28 *(index)*
2	3	Binary Input Change Event - with relative time			*(Response)*	17, 28 *(index)*
2	3	Binary Input Change Event - with relative time			*(Unsol. Resp.)*	17, 28 *(index)*
3	0	Double-Bit Binary Input - any variation				
3	1	Double-Bit Binary Input - packed format				
3	2	Double-Bit Binary Input - with flags				
4	0	Double-Bit Binary Input Change Event - any variation				
4	1	Double-Bit Binary Input Change Event - without time				
4	2	Double-Bit Binary Input Change Event - with absolute time				

4	3	Double-Bit Binary Input Change Event - with relative time				
10	0	Continuous Control - any variation	1*(read)*	00, 01 *(start-stop)*		
10	2	Continuous Control - binary output status	1*(read)*	00, 01 *(start-stop)*	*(Response)*	00, 01 *(start-stop)*
11	0	Binary Output Event - any variation				
11	1	Binary Output Event - Status without time			*(Response)*	17, 28 *(index)*
11	1	Binary Output Event - Status without time			*(Unsol. Resp.)*	17, 28 *(index)*
11	2	Binary Output Event - Status with time			*(Response)*	17, 28 *(index)*
11	2	Binary Output Event - Status with time			*(Unsol. Resp.)*	17, 28 *(index)*
12	0	Binary Command - control relay output block (CROB)				
12	1	Binary Command - control relay output block (CROB)	3*(select)*	17, 28 *(index)*	*(Response)*	echo of request
12	1	Binary Command - control relay output block (CROB)	4*(operate)*	17, 28 *(index)*	*(Response)*	echo of request
12	1	Binary Command - control relay output block (CROB)	5*(direct op.)*	17, 28 *(index)*	*(Response)*	echo of request
12	1	Binary Command - control relay output block (CROB)	6*(direct op, no ack)*	17, 28 *(index)*	*(Response)*	echo of request
13	0	Binary Output Command Event - any variation				
13	1	Binary Output Command Event - command status			*(Response)*	17, 28 *(index)*
13	1	Binary Output Command Event - command status			*(Unsol. Resp.)*	17, 28 *(index)*
13	2	Binary Output Command Event - command status with time			*(Response)*	17, 28 *(index)*
13	2				*(Unsol. Resp.)*	17, 28 *(index)*

		Binary Output Command Event - command status with time				
20	0	Counter - any variation	1*(read)*	00, 01 *(start-stop)*		
20	1	Counter - 32-bit with flag	1*(read)*	00, 01 *(start-stop)*	*(Response)*	00, 01 *(start-stop)*
20	2	Counter - 16-bit with flag	1*(read)*	00, 01 *(start-stop)*	*(Response)*	00, 01 *(start-stop)*
20	5	Counter - 32-bit without flag	1*(read)*	00, 01 *(start-stop)*	*(Response)*	00, 01 *(start-stop)*
20	6	Counter - 16-bit without flag	1*(read)*	00, 01 *(start-stop)*	*(Response)*	00, 01 *(start-stop)*
21	0	Frozen Counter - any variation				
21	1	Frozen Counter - 32-bit with flag	1*(read)*	00, 01 *(start-stop)*	*(Response)*	00, 01 *(start-stop)*
21	1	Frozen Counter - 32-bit with flag			*(Unsol. Resp.)*	00, 01 *(start-stop)*
21	2	Frozen Counter - 16-bit with flag	1*(read)*	00, 01 *(start-stop)*	*(Response)*	00, 01 *(start-stop)*
21	2	Frozen Counter - 16-bit with flag			*(Unsol. Resp.)*	00, 01 *(start-stop)*
21	5	Frozen Counter - 32-bit with flag and time				
21	6	Frozen Counter - 16-bit with flag and time				
21	9	Frozen Counter - 32-bit without flag	1*(read)*	00, 01 *(start-stop)*	*(Response)*	00, 01 *(start-stop)*
21	9	Frozen Counter - 32-bit without flag			*(Unsol. Resp.)*	00, 01 *(start-stop)*
21	10	Frozen Counter - 16-bit without flag	1*(read)*	00, 01 *(start-stop)*	*(Response)*	00, 01 *(start-stop)*
21	10	Frozen Counter - 16-bit without flag			*(Unsol. Resp.)*	00, 01 *(start-stop)*
22	0	Counter Change Event - any variation				
22	1	Counter Change Event - 32-bit with flag			*(Response)*	17, 28 *(index)*
22	1	Counter Change Event - 32-bit with flag			*(Unsol. Resp.)*	17, 28 *(index)*
22	2				*(Response)*	

		Counter Change Event - 16-bit with flag				17, 28 *(index)*
22	2	Counter Change Event - 16-bit with flag			*(Unsol. Resp.)*	17, 28 *(index)*
22	5	Counter Change Event - 32-bit with flag and time			*(Response)*	17, 28 *(index)*
22	5	Counter Change Event - 32-bit with flag and time			*(Unsol. Resp.)*	17, 28 *(index)*
22	6	Counter Change Event - 16-bit with flag and time			*(Response)*	17, 28 *(index)*
22	6	Counter Change Event - 16-bit with flag and time			*(Unsol. Resp.)*	17, 28 *(index)*
23	0	Frozen Counter Event - any variation				
23	1	Frozen Counter Event - 32-bit with flag				
23	2	Frozen Counter Event - 16-bit with flag				
23	5	Frozen Counter Event - 32-bit with flag and time				
23	6	Frozen Counter Event - 16-bit with flag and time				
30	0	Analog Input - any variation	1 *(read)*	00, 01 *(start-stop)*		
30	1	Analog Input - 32-bit with flag	1 *(read)*	00, 01 *(start-stop)*	*(Response)*	00, 01 *(start-stop)*
30	2	Analog Input - 16-bit with flag	1 *(read)*	00, 01 *(start-stop)*	*(Response)*	00, 01 *(start-stop)*
30	3	Analog Input - 32-bit without flag	1 *(read)*	00, 01 *(start-stop)*	*(Response)*	00, 01 *(start-stop)*
30	4	Analog Input - 16-bit without flag	1 *(read)*	00, 01 *(start-stop)*	*(Response)*	00, 01 *(start-stop)*
30	5	Analog Input - single-precision, floating-point with flag	1 *(read)*	00, 01 *(start-stop)*	*(Response)*	00, 01 *(start-stop)*
32	0	Analog Input Change Event - any variation				
32	1	Analog Input Change Event - 32-bit without time			*(Response)*	17, 28 *(index)*
32	1				*(Unsol. Resp.)*	17, 28 *(index)*

		Analog Input Change Event - 32-bit without time				
32	2	Analog Input Change Event - 16-bit without time			*(Response)*	17, 28 *(index)*
32	2	Analog Input Change Event - 16-bit without time			*(Unsol. Resp.)*	17, 28 *(index)*
32	3	Analog Input Change Event - 32-bit with time			*(Response)*	17, 28 *(index)*
32	3	Analog Input Change Event - 32-bit with time			*(Unsol. Resp.)*	17, 28 *(index)*
32	4	Analog Input Change Event - 16-bit with time			*(Response)*	17, 28 *(index)*
32	4	Analog Input Change Event - 16-bit with time			*(Unsol. Resp.)*	17, 28 *(index)*
32	5	Analog Input Change Event - single-precision, floating-point without time			*(Response)*	17, 28 *(index)*
32	5	Analog Input Change Event - single-precision, floating-point without time			*(Unsol. Resp.)*	17, 28 *(index)*
32	7	Analog Input Change Event - single-precision, floating-point with time			*(Response)*	17, 28 *(index)*
32	7	Analog Input Change Event - single-precision, floating-point with time			*(Unsol. Resp.)*	17, 28 *(index)*
34	0	Analog Input Deadband - any variation				
34	1	Analog Input Deadband - 16-bit				
34	2	Analog Input Deadband - 32-bit				
34	3	Analog Input Deadband - single-precision floating point				
40	0	Analog Output Status - any variation	1 *(read)*	00, 01 *(start-stop)*		
40	1		1 *(read)*		*(Response)*	

		Analog Output Status - 32-bit with flag		00, 01 *(start-stop)*		00, 01 *(start-stop)*
40	2	Analog Output Status - 16-bit with flag	1*(read)*	00, 01 *(start-stop)*	*(Response)*	00, 01 *(start-stop)*
40	3	Analog Output Status - single-precision, floating-point with flag	1*(read)*	00, 01 *(start-stop)*	*(Response)*	00, 01 *(start-stop)*
41	0	Analog Output Block - any variation				
41	1	Analog Output Block - 32-bit	3*(select)*	17, 28 *(index)*	*(Response)*	echo of request
41	1	Analog Output Block - 32-bit	4*(operate)*	17, 28 *(index)*	*(Response)*	echo of request
41	1	Analog Output Block - 32-bit	5*(direct op.)*	17, 28 *(index)*	*(Response)*	echo of request
41	1	Analog Output Block - 32-bit	6*(direct op, no ack)*	17, 28 *(index)*	*(Response)*	echo of request
41	2	Analog Output Block - 16-bit	3*(select)*	17, 28 *(index)*	*(Response)*	echo of request
41	2	Analog Output Block - 16-bit	4*(operate)*	17, 28 *(index)*	*(Response)*	echo of request
41	2	Analog Output Block - 16-bit	5*(direct op.)*	17, 28 *(index)*	*(Response)*	echo of request
41	2	Analog Output Block - 16-bit	6*(direct op, no ack)*	17, 28 *(index)*	*(Response)*	echo of request
41	3	Analog Output Block - single-precision, floating-point	3*(select)*	17, 28 *(index)*	*(Response)*	echo of request
41	3	Analog Output Block - single-precision, floating-point	4*(operate)*	17, 28 *(index)*	*(Response)*	echo of request
41	3	Analog Output Block - single-precision, floating-point	5*(direct op.)*	17, 28 *(index)*	*(Response)*	echo of request
41	3	Analog Output Block - single-precision, floating-point	6*(direct op, no ack)*	17, 28 *(index)*	*(Response)*	echo of request
42	0	Analog Output Event - any variation				
42	1	Analog Output Event - 32-bit without time			*(Response)*	17, 28 *(index)*
42	1					

		Analog Output Event - 32-bit without time			*(Unsol. Resp.)*	17, 28 *(index)*
42	2	Analog Output Event - 16-bit without time			*(Response)*	17, 28 *(index)*
42	2	Analog Output Event - 16-bit without time			*(Unsol. Resp.)*	17, 28 *(index)*
42	3	Analog Output Event - 32-bit with time			*(Response)*	17, 28 *(index)*
42	3	Analog Output Event - 32-bit with time			*(Unsol. Resp.)*	17, 28 *(index)*
42	4	Analog Output Event - 16-bit with time			*(Response)*	17, 28 *(index)*
42	4	Analog Output Event - 16-bit with time			*(Unsol. Resp.)*	17, 28 *(index)*
42	5	Analog Output Event - single-precision floating point without time			*(Response)*	17, 28 *(index)*
42	5	Analog Output Event - single-precision floating point without time			*(Unsol. Resp.)*	17, 28 *(index)*
42	7	Analog Output Event - single-precision floating point with time			*(Response)*	17, 28 *(index)*
42	7	Analog Output Event - single-precision floating point with time			*(Unsol. Resp.)*	17, 28 *(index)*
43	0	Analog Output Command Event - any variation				
43	1	Analog Output Command Event - 32-bit without time			*(Response)*	17, 28 *(index)*
43	1	Analog Output Command Event - 32-bit without time			*(Unsol. Resp.)*	17, 28 *(index)*
43	2	Analog Output Command Event - 16-bit without time			*(Response)*	17, 28 *(index)*
43	2	Analog Output Command Event - 16-bit without time			*(Unsol. Resp.)*	17, 28 *(index)*
43	3	Analog Output Command Event - 32-bit with time			*(Response)*	17, 28 *(index)*

43	3	Analog Output Command Event - 32-bit with time			*(Unsol. Resp.)*	17, 28 *(index)*
43	4	Analog Output Command Event - 16-bit with time			*(Response)*	17, 28 *(index)*
43	4	Analog Output Command Event - 16-bit with time			*(Unsol. Resp.)*	17, 28 *(index)*
43	5	Analog Output Command Event - single-precision floating point without time			*(Response)*	17, 28 *(index)*
43	5	Analog Output Command Event - single-precision floating point without time			*(Unsol. Resp.)*	17, 28 *(index)*
43	7	Analog Output Command Event - single-precision floating point with time			*(Response)*	17, 28 *(index)*
43	7	Analog Output Command Event - single-precision floating point with time			*(Unsol. Resp.)*	17, 28 *(index)*
50	1	Time and Date - absolute time	1*(read)*	07 *(limited qty = 1)*	*(Response)*	07 *(limited qty = 1)*
50	1	Time and Date - absolute time	2*(write)*	07 *(limited qty = 1)*		
50	3	Time and Date - absolute time at last recorded time				
51	1	Time and Date CTO - absolute time, synchronised			*(Response)*	07 *(limited qty = 1)*
51	1	Time and Date CTO - absolute time, synchronised			*(Unsol. Resp.)*	07 *(limited qty = 1)*
51	2	Time and Date CTO - absolute time, unsynchronised			*(Response)*	07 *(limited qty = 1)*
51	2	Time and Date CTO - absolute time, unsynchronised			*(Unsol. Resp.)*	07 *(limited qty = 1)*
52	1	Time Delay - coarse			*(Response)*	07 *(limited qty = 1)*
52	2	Time Delay - fine			*(Response)*	07 *(limited qty = 1)*
60	1		1*(read)*			

		Class Objects - class 0 data		06 *(no range, or all)*		
60	2	Class Objects - class 1 data	1*(read)*	06 *(no range, or all)*		
60	2	Class Objects - class 1 data	20*(enable unsol.)*	06 *(no range, or all)*		
60	2	Class Objects - class 1 data	21*(disable unsol.)*	06 *(no range, or all)*		
60	3	Class Objects - class 2 data	1*(read)*	06 *(no range, or all)*		
60	3	Class Objects - class 2 data	20*(enable unsol.)*	06 *(no range, or all)*		
60	3	Class Objects - class 2 data	21*(disable unsol.)*	06 *(no range, or all)*		
60	4	Class Objects - class 3 data	1*(read)*	06 *(no range, or all)*		
60	4	Class Objects - class 3 data	20*(enable unsol.)*	06 *(no range, or all)*		
60	4	Class Objects - class 3 data	21*(disable unsol.)*	06 *(no range, or all)*		
70	2	File - Authentication (Not Supported)				
70	3	File - Command				
70	4	File - Command Status				
70	5	File - Transport				
70	6	File - Transport Status				
70	7	File - Descriptor				
80	1	Internal Indications - clear IIN1.7 - DEVICE_RESTART	2*(write)*	00 *(start-stop) (Index=7)*		
110	string length	Octet String				
112	string length	Virtual Terminal - Output Block				
113						

	string length	Virtual Terminal - Event Data				
120	1	Authentication Challenge	32*(auth req)*	5B	*(Auth. Resp.)*	5B
120	1	Authentication Challenge			*(Response)*	5B
120	1	Authentication Challenge			*(Unsol. Resp.)*	5B
120	2	Authentication Reply	32*(auth req)*	5B	*(Auth. Resp.)*	5B
120	3	Authentication Aggresive Mode Request	any of 1 to 31	07 *(limited qty = 1)*	*(Response)*	07 *(limited qty = 1)*
120	3	Authentication Aggresive Mode Request			*(Unsol. Resp.)*	07 *(limited qty = 1)*
120	4	Session Key Status Request	32*(auth req)*	07 *(limited qty = 1)*		
120	5	Session Key Status			*(Auth. Resp.)*	5B
120	6	Session Key Change	32*(auth req)*	5B		
120	7	Authentication Error	33*(auth req, no ack)*	07 *(limited qty = 1)*	*(Auth. Resp.)*	5B
120	7	Authentication Error			*(Response)*	5B
120	7	Authentication Error			*(Unsol. Resp.)*	5B
120	9	Hashed Message Authentication Code (HMAC)	any of 1 to 31	5B	*(Response)*	5B
120	9	Hashed Message Authentication Code (HMAC)			*(Unsol. Resp.)*	5B
No object (function code only)			0*(confirm)*			
No object (function code only)			13*(cold restart)*			
No object (function code only)			14*(warm restart)*			
No object (function code only)			23*(delay meas.)*			

5 Data Points List (outstation only)

This part of the Device Profile shows, for each data type, a table defining the data points available in the device or a description of how this information can be obtained if the database is configurable.

This section is not included in this Master Station Profile.

---------- End of Device Profile for Reference Device ----------

---------- End of Complete Device Profile ----------

HART

STB Multiplexer Applications Guide

4/2013

S1B40735.01

www.schneider-electric.com

Table of Contents

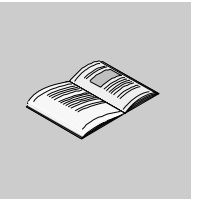

Safety Information

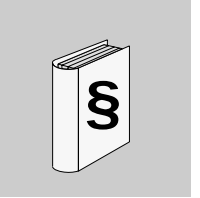

Important Information

NOTICE

Read these instructions carefully, and look at the equipment to become familiar with the device before trying to install, operate, or maintain it. The following special messages may appear throughout this documentation or on the equipment to warn of potential hazards or to call attention to information that clarifies or simplifies a procedure.

The addition of this symbol to a Danger safety label indicates that an electrical hazard exists, which will result in personal injury if the instructions are not followed.

This is the safety alert symbol. It is used to alert you to potential personal injury hazards. Obey all safety messages that follow this symbol to avoid possible injury or death.

⚠ DANGER

DANGER indicates an imminently hazardous situation which, if not avoided, **will result in** death or serious injury.

⚠ WARNING

WARNING indicates a potentially hazardous situation which, if not avoided, **can result in** death or serious injury.

⚠ CAUTION
CAUTION indicates a potentially hazardous situation which, if not avoided, **can result in** minor or moderate injury.

NOTICE
NOTICE is used to address practices not related to physical injury.

PLEASE NOTE

Electrical equipment should be installed, operated, serviced, and maintained only by qualified personnel. No responsibility is assumed by Schneider Electric for any consequences arising out of the use of this material.

A qualified person is one who has skills and knowledge related to the construction and operation of electrical equipment and its installation, and has received safety training to recognize and avoid the hazards involved.

About the Book

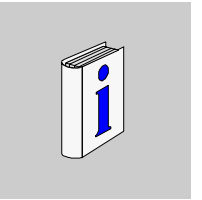

At a Glance

Document Scope

This manual describes specific application solutions employing the Highway Addressable Remote Transducer (HART) multiplexer.

The specific configuration settings contained in this manual are intended to be used for instructional purposes only. The settings required for your specific configuration may differ from the examples presented in this manual.

Validity Note

The solutions described in the manual require the use of the following versions of hardware and software:

- Advantys configuration software version 5.5 with patch 4 build 6, or Advantys Configuration software version 7.0 or higher
- STB AHI 8321 HART interface module, version 1.00 or higher
- STB NIP 2311 network interface module, version 4.00 or higher

Related Documents

For additional information about the STB AHI 8321 HART interface module, refer to the online help files for the Advantys configuration software, and to the following technical publication:

Title of Documentation	Reference Number
Advantys STB Special Modules Reference Guide	31007730 (English), 31007731 (French), 31007732 (German), 31007733 (Spanish), 31007734 (Italian)
Advantys STB Standard Dual Port Ethernet Modbus TCP/IP Network Interface Module	EIO0000000051 (English), EIO0000000052 (French), EIO0000000053 (German), EIO0000000054 (Spanish), EIO0000000055 (Italian)

You can download these technical publications and other technical information from our website at www.schneider-electric.com.

User Comments

We welcome your comments about this document. You can reach us by e-mail at techcomm@schneider-electric.com.

Getting Started

1

Creating Your First Multiplexer

Overview

The Schneider Electric HART multiplexer acts as a gateway to HART-enabled intelligent field instruments. This example shows you how to get started and build your first Schneider Electric HART multiplexer.

After you complete this chapter, you will be able to see the status and data from HART field instruments on the multiplexer web pages.

This example is intended for use on your test bench. For permanent installation, consult the later chapters of this guide.

The HART Multiplexer

The Schneider Electric HART multiplexer solution is modular and expandable solution. A single Schneider Electric HART multiplexer can support up to 32 HART channels. The HART protocol communicates at the rate of 1200 baud.

This example shows you how to build the following Schneider Electric HART multiplexer. This example presents the minimum configuration.

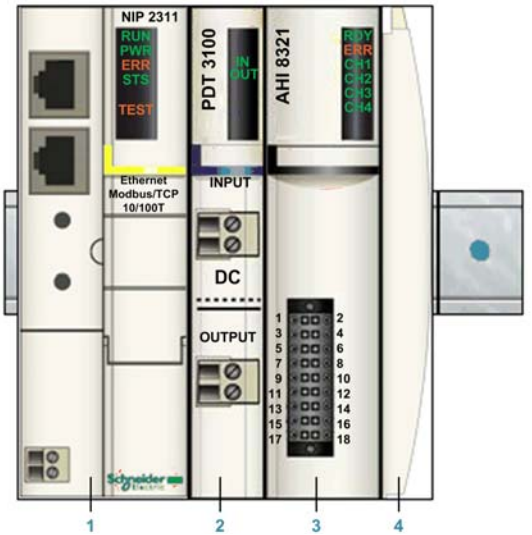

1 STB NIP 2311 Ethernet network interface module version 4.0 or higher
2 STB PDT 3100 power distribution module
3 STB AHI 8321 4-channel HART interface module
4 STB XMP 1100 terminator plate

Explosive Environments

The STB AHI 8321 multiplexer is ATEX and FM certified for use in hazardous locations where potentially explosive atmospheres may exist. For details see Explosive Environments in the Advantys STB System Planning and Installation Guide (890 USE 171).

⚠ DANGER

EXPLOSIVE ENVIRONMENT HAZARD

Do not substitute components which may impair suitability for ATEX Ex or FM Class 1 Division 2 certifications.

Failure to follow these instructions will result in death or serious injury.

Task 1: Selecting a DIN Rail

The STB modules in your HART multiplexer are designed to be mounted on a standard high-profile din rail. A standard DIN rail is 35 mm (1.38 in) wide.

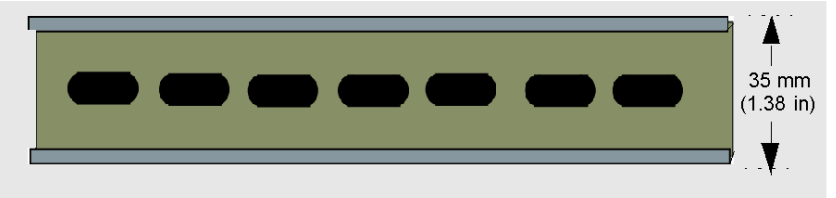

The standard DIN rail is 15 mm (0.59 in) deep:

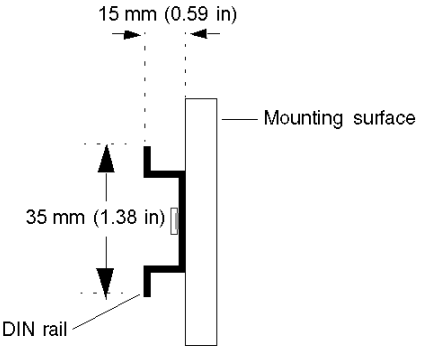

Select a DIN rail that is wider than the cumulative widths of modules you will install on it. In this example, select a DIN rail that is at least 152 mm (6 in) long.

NOTE: The HART multiplexer requires 24 Vdc power. If you plan to mount your power supply on the DIN rail, select a DIN rail long enough for both the HART multiplexer modules and the power supply.

Task 2: Installing the HART-Enabled Ethernet Network Interface Module

Every HART multiplexer includes a single HART-enabled Ethernet network interface module (NIM). The NIM is the first (leftmost) module on the DIN rail.

In this example, use an STB NIP 2311 NIM, product version 4.0 or higher. You can locate the NIM product version (PV), plus the original module firmware version and certification markings, on the face of the NIM as indicated below:

Install the STB NIP 2311NIM directly on the DIN rail in one piece, as follows:

Step	Action
1	Determine the exact location on the DIN rail where you want to position the NIM before you place it on the rail. **NOTE:** Reserve sufficient space to the right of the NIM for the other island modules you want to mount on the DIN rail.
2	Turn the release screw (2) on the NIM so that the mounting clips on the back are in their relaxed state. 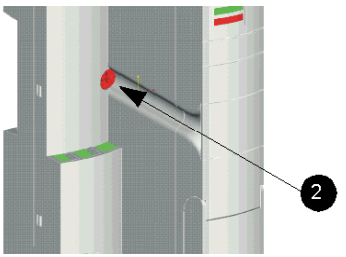

⚠ CAUTION

UNINTENDED EQUIPMENT OPERATION

Do not slide the NIM along the DIN rail. Sliding the NIM can crush the functional ground (FE) contacts on the back of the NIM. Crushed FE contacts can prevent the creation of the FE connection.

Failure to follow these instructions can result in injury or equipment damage.

Step	Action
3	Align the mounting clips with the DIN rail and push the NIM straight onto the rail. The slope of the mounting clips causes the rail to open the clips when you apply light pressure. 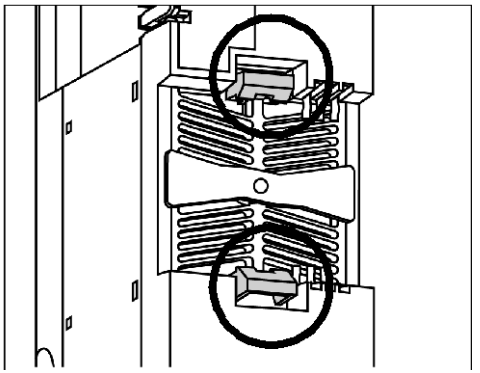
4	Push the module pushed on to the rail until the clips snap closed. 

Task 3: Assembling the HART Multiplexer Backplane

Unlike the NIM, the remaining island modules are not attached directly to the DIN rail. Instead, each module resides in a base unit that comes with the module. In this example, you will create the HART multiplexer backplane by interconnecting the following sequence of base units:

1. add one STB XBA 2200 base unit (for the STB PDT 3100 power distribution module) to the right of the NIM
2. add one STB XBA 3000 base unit (for the STB AHI 8321 HART interface module) to the right of the PDT base
3. add an STB SMP 1100 termination plate to the right of the PDT base, to terminate the HART multiplexer backplane

Proceeding in a left to right direction from the NIM, follow these steps to create your HART multiplexer backplane:

Step	Action
1	Select the STB XBA 2200 base unit that came with your PDM to place directly to the right of the NIM.
2	Using a small screwdriver with a flat blade no wider than 2.5 mm (0.99 in), move the DIN rail latch on the base unit to its full open position. 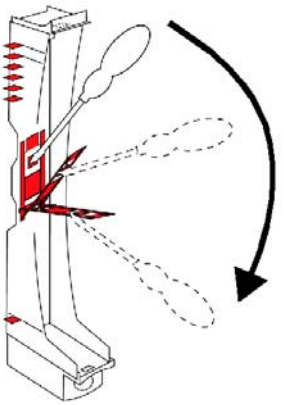

Step	Action
3	Align the contacts on the base with the contact channels on the NIM and push the base toward the DIN rail until the interlocking channels meet. Using the interlocking channels as guides, slide the base toward the DIN rail (push from the center of the base). When the base meets the DIN rail, hold the base unit firmly against the DIN rail and push the DIN rail latch into the locked position. 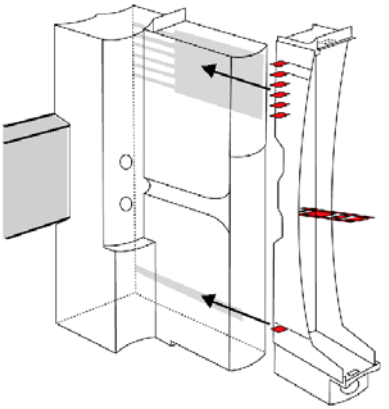
4	Select the STB XBA 3000 base unit for the STB AHI 8321 HART interface module. Insert this unit directly to the right of the previous base unit; then repeat steps 2 and 3.
5	Select the STB XBE 1100 termination plate
6	Align the interlocking channels at the top and bottom left of the termination plate with the channels on the right side of the last module base.
7	Using the interlocking channels as guides, slide the plate toward the DIN rail until it snaps onto the rail.  **NOTE:** The illustration, above, displays several base units. The backplane you will construct in this example includes only 2 base units.

Task 4: Providing Power to the HART Multiplexer

The next task is to bring 24 Vdc power to the HART multiplexer. You need to supply power to both:

- STB NIP 2311 NIM, which provides logic power to the HART multiplexer modules
- STB PDT 3100 power distribution module, which provides both sensor and actuator power to the island

The following graphic shows you how to provide power supply wiring to the STB NIP 2311 NIM and an STB PDT 3100 standard PDM:

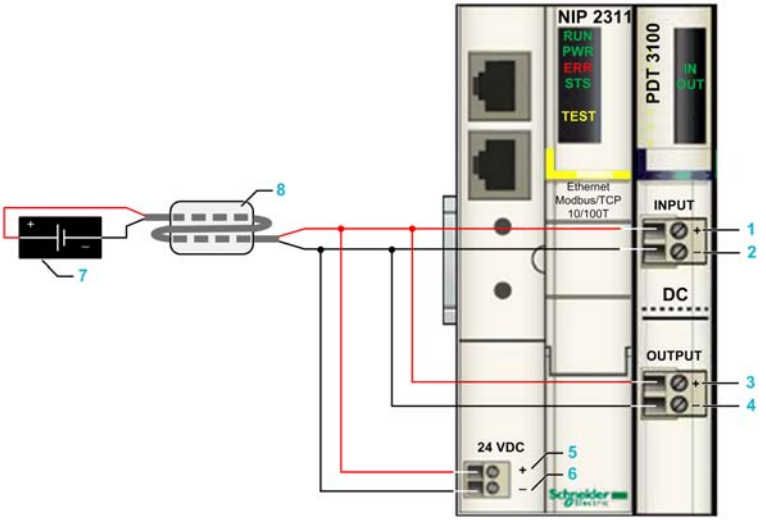

1 +24 Vdc sensor bus power
2 sensor bus return
3 +24 Vdc actuator bus power
4 actuator bus return
5 +24 Vdc island logic power supply
6 island logic power return
7 External 24 Vdc power supply
8 Wurth 74271633 ferrite bead

NOTE: To maintain CE compliance, use a Wurth 74271633 ferrite bead with NIM, PDM, BOS, and CPS power supplies. Pass the twisted pair wiring through the ferrite bead twice.

Schneider Electric recommends the Phaseo ABL8 RP 24100 power supply *(see page 61)* for supplying logic, actuator and sensor power.

Task 5: Wiring the Current Loops

Each STB AHI 8321 HART interface module provides 4 HART channels. Each channel can connect to a single 4-20 mA current loop and communicate with a single HART field instrument. In this example, the HART multiplexer is connected to a single HART field instrument on channel 1.

The following graphic shows you how to connect 4-20 mA current loop wiring channel 1 of the STB AHI 8321 HART interface module:

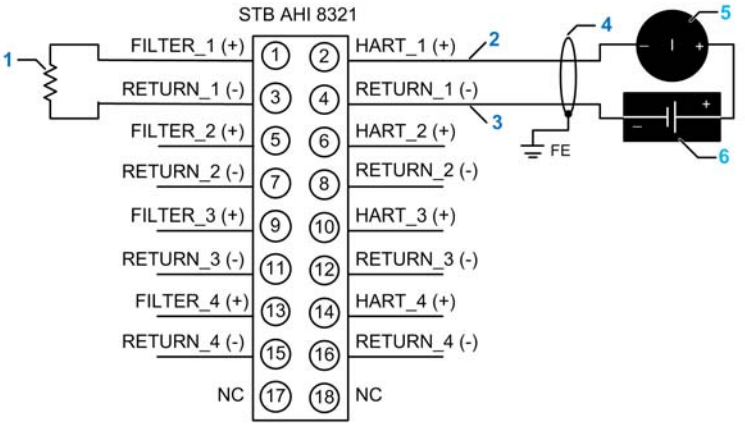

1 220 Ω resistor
2 Channel 1 current loop (+) wiring to HART field instrument
3 Channel 1 current loop (-) return from HART field instrument
4 Functional ground (FE)
5 HART field instrument
6 24 Vdc current loop power supply

As the preceding graphic indicates, use pins 2 and 4 to connect channel 1 of the STB AHI 8321 HART interface module to a HART field instrument.

When connecting the island modules to current loop wiring:

- use wire sizes in the range 0.20...0.82 mm^2 (24...18 AWG)
- strip at least 9 mm from the wire's jacket for the connection to STB AHI 8321 module
- use shielded twisted-pair cable
- tie the twisted-pair cable shield to an external clamp that is tied to ground

NOTE: Refer to the topic Wiring the HART Multiplexer to I/O Modules *(see page 132)* for examples of wiring the HART multiplexer to I/O on STB, Quantum, Premium, and M340 platforms.

Task 6: Assigning an IP Address

In this example, you will set the IP address of the HART multiplexer to its default IP address. To do this, use the bottom rotary switch (the ONES switch) on the front of the STB NIP 2311 NIM.

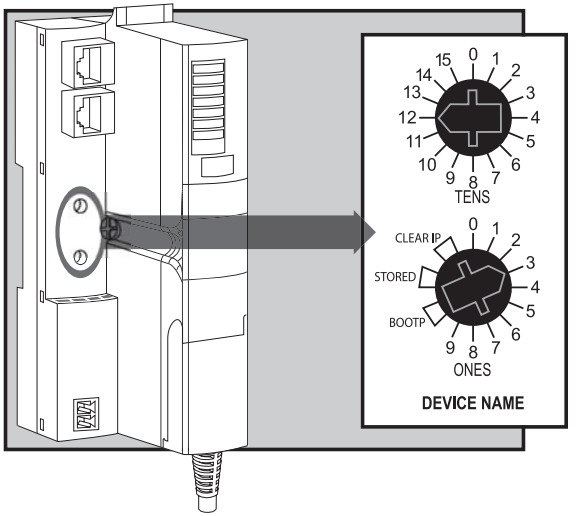

Follow these steps to assign your HART multiplexer island its default IP address:

Step	Action
1	Apply power to the HART multiplexer.
2	Turn the bottom (ONES) switch on the STB NIP 2311 NIM so that it points to one of the **CLEAR IP** positions. This clears any previously assigned IP address. **NOTE:** The position of the top (TENS) switch does not matter.
3	Turn the bottom (ONES) switch on the STB NIP 2311 NIM so that it points to one of the **STORED** positions. This NIM applies its default IP address. **NOTE:** The position of the top (TENS) switch does not matter.

The default IP address is derived from the last 2 pair of two-digit numbers in the MAC ID of your STB NIP 2311 NIM. The MAC ID of your STB NIP 2311 NIM is printed on the front of the NIM above the two Ethernet connector ports.

The default IP address observes the format 10.10.*x.y*, where:

- 10.10. are constants
- *x.y*. are the decimal values of the last 2 pair of two-digit numbers in the MAC ID.

The following example shows you how to convert the two *x.y.* pair of two-digit numbers from hexadecimal to decimal format and identify the HART multiplexer's default IP address:

Step	Action	
1	Using a sample MAC ID of 00-00-54-10-25-16, ignore the first four pair (00-00-54-10). **NOTE:** You need to use the MAC ID that appears on your STB NIP 2311 NIM.	
2	Convert the last two pair (*25* and *16*) from hexadecimal to decimal format.	**25:** (2 x 16) + 5 = *37*
		16: (1 x 16) + 6 = *22*
3	Observe the specified format (10.10.*x.y.*) to assemble the derived default IP address.	The default IP address is: 10.10.37.22

Task 7: Auto-Configuring the HART Multiplexer

The auto-configuration process assigns default settings to the modules that comprise your HART multiplexer island—except IP address, which was assigned in the previous task. Using auto-configuration, no manual configuration of island modules needs to be performed. To perform auto-configuration, press the RST button on the STB NIP 2311 NIM.

⚠ CAUTION

UNINTENDED EQUIPMENT OPERATION

Do not press the RST button–or force auto-configuration–for a HART multiplexer island that is operating using an application that was custom configured with Advantys configuration software.

Failure to follow these instructions can result in injury or equipment damage.

The RST button is located immediately above the CFG port on the NIM, behind the NIM hinged cover:

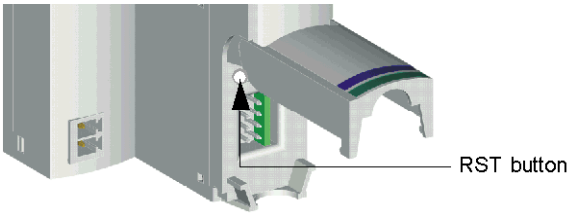

To perform auto-configuration, follow these steps:

Step	Action
1	Confirm that power is applied to the HART multiplexer.
2	Using a small screwdriver with a flat blade no wider than 2.5 mm (0.99 in), press the RST button and hold it down for at least 2 seconds. Do not use: ● a sharp object that can damage the RST button, or ● a soft item like a pencil that can break off and jam the RST button

Task 8: Confirming the HART Multiplexer is Operating Normally

To confirm that your multiplexer is operating properly, check the RDY and ERR LEDs on the front of the STB AHI 8321 HART interface module:

When your HART multiplexer is operating normally:
- the RDY LED is solid green
- the ERR LED is off

Task 9: Monitoring HART Multiplexer Operations

After confirming that the HART multiplexer is operating normally, you can open the web pages for the STB NIP 2311 NIM where you can:
- monitor operations
- diagnose the HART multiplexer
- edit the HART multiplexer configuration—for example, you can assign the multiplexer a different IP address

NOTE: When commissioning a HART multiplexer for operation in a network, Schneider Electric recommends that you not use the default IP address. Instead, give each HART multiplexer its own unique IP address, as assigned by your network administrator.

To access the web pages, follow these steps:

Step	Action
1	Connect your PC via Ethernet cable to one of the Ethernet ports of the STB NIP 2311 NIM.
2	Confirm that your PC has an alternate IP address on the same network as the HART multiplexer. Recall that the default IP address of the multiplexer is in the format 10.10.x.y. You will probably need to add an alternate network IP address to your PC using the same format. Verify that the IP address you add is not the same as the default IP address for the HART multiplexer.
3	Open an internet browser on your PC and type in the default IP address of the HART multiplexer, then press **Enter**.
4	In the **Security** dialog, enter the appropriate username and password. **NOTE:** ● the **User name** is the constant value **USER** ● the default **Password** is also **USER**, but can be changed The **Password** page opens.

The **Home** page of the STB NIP 2311 NIM:

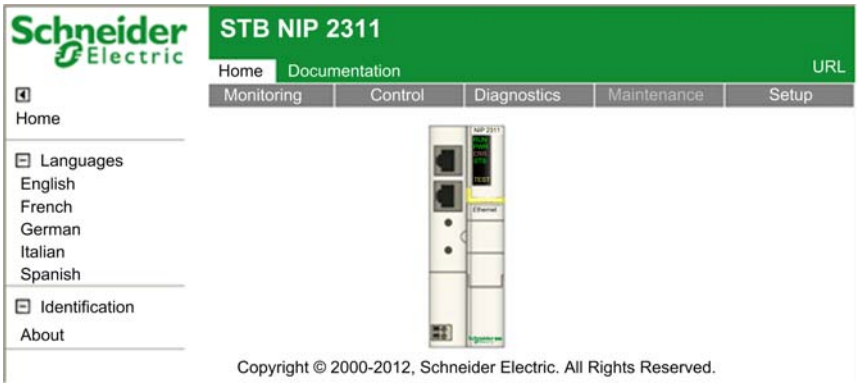

You can access HART-specific web information by clicking on the **Diagnostics** menu item (above), then under **HART** selecting the following page:

- **Instrument Overview**: to monitor data relating to selected HART field instruments

The following is an example of the HART **Instrument Overview** web page:

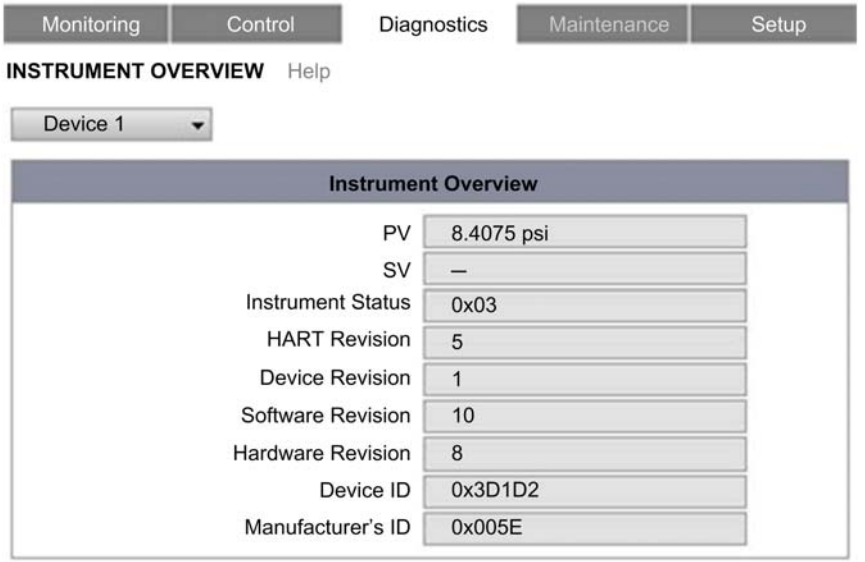

For details of the contents of this page, refer to the *Embedded Web Pages* section of the *Advantys STB Standard Dual Port Ethernet Modbus TCP/IP Network Interface Module Applications Guide*.

Introducing HART

2

Overview

This chapter introduces the Highway Addressable Remote Transducer (HART) protocol, and describes the Schneider Electric HART multiplexer.

What Is in This Chapter?

This chapter contains the following topics:

Introducing HART

The HART Protocol

The Highway Addressable Remote Transducer (HART) protocol provides digital communication to microprocessor-based analog process control instruments.

HART uses the Bell 202 frequency-shift-keying (FSK) standard to superimpose a digital signal on top of the 4-20 mA current loop analog signal:

- the analog signal communicates the primary measured process variable value
- the digital signal communicates additional instrument information including instrument status, additional process variables, configuration data, and diagnostics

The digital signal shifts between a frequency of 1200 Hz (representing a binary 1) and a frequency of 2200 Hz (representing a binary 0):

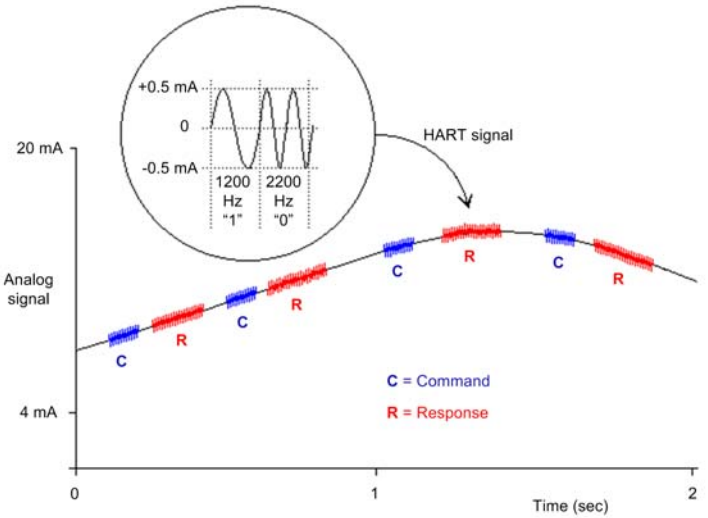

These digital signal frequencies are higher than the analog signaling frequency range of 0...10 Hz. The digital signal is typically isolated using a passive high-pass filter with a cut-off frequency in the range of 400 Hz to 800 Hz. The analog signal is likewise isolated using a passive low-pass filter.

The separation in frequency between HART and analog signaling allows both signals to coexist on the same current loop. Because the HART digital signal is phase continuous:

- it does not interfere with the 4-20 mA signal, and
- allows the analog process to continue operating during HART digital communication

Half-duplex Communication Protocol

HART communication is half-duplex in design, which means that a HART-compliant instrument does not simultaneously transmit and receive.

Master - Slave Protocol

HART is a master-slave protocol. A HART-slave responds only when commanded by a HART master. Examples of HART-compliant instruments include:

- HART masters:
  - asset management software (AMS) running on a PC
  - a HART interface module—for example, the STB AHI 8321 module—when it is communicating with a HART process control instrument
  - a hand-held device temporarily attached to the network
- HART slaves:
  - a HART process control instrument

Defining HART Instruments

A Device Description Language (DDL) file—provided by the device manufacturer—can define a HART instrument. The DDL serves as a universal software interface for new and existing network instruments.

Introducing the STB HART Multiplexer

Multiplexer Components

The Schneider Electric STB HART multiplexer is a special-purpose STB island that includes some combination of the following modules:

- Required modules:
  - 1 HART-enabled STB Ethernet network interface module, for example the STB NIP 2311 version 4.0 or higher
  - 1 STB PDT 310x power distribution module
  - a minimum of 1, up to a maximum of 8, STB AHI 8321 HART interface modules
- Optional modules:
  - Analog input modules
  - Analog output modules
  - STB CPS 2111 auxiliary power supply modules, as needed
  - STB XBE 1300 beginning of segment (BOS) modules
  - STB XBE 1100 end of segment (EOS) modules

NOTE:

- The HART multiplexer is a special kind of STB island. Only the modules described above relate to the use of the STB island as a HART multiplexer. Although you can add other types of modules to a HART multiplexer, STB island designs that include other modules are beyond the scope of this document.
- The HART multiplexer operates at the default backplane speed of 800 kbaud. However, if you add an STB XBE 2100 CANopen extension module to the island, you need to re-configure the backplane speed to 500 kbaud, thereby slowing the performance of the HART multiplexer. Refer to the help topics for the STB XBE 2100 CANopen extension module for additional information.

The following is an example of an HART multiplexer island.

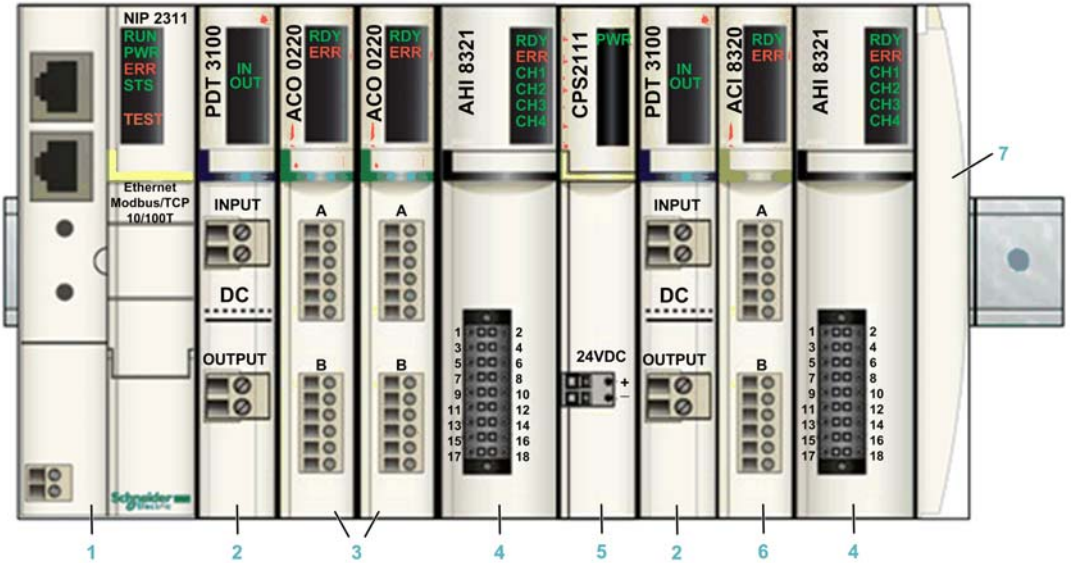

1 STB NIP 2311 Ethernet network interface module, version 4.0 or higher
2 STB PDT 3100 power distribution module
3 2 STB ACO 0220 analog output module (optional)
4 STB AHI 8321 HART interface module
5 STB CPS 2111 auxiliary power supply
6 STB ACI 8320 analog input module (optional)
7 STB XMP 1100 terminator plate

Maximum Multiplexer Size

A single Schneider Electric HART multiplexer can support a maximum of 32 HART instruments—one instrument per channel—when you use:

- the maximum of eight (8) STB AHI 8321 HART interface modules per island
- the maximum of four (4) channels for each HART interface module

HART Multiplexer Features

Multiplexer Features

The STB HART multiplexer presents the following features:

- Auto-configurable default operating parameter settings, which enable the commissioning of the multiplexer without custom configuration
- A minimum of 4 (up to a maximum of 32) 4-20 mA current loop connections, each connection linking a channel on an input or output module to an analog HART instrument
- Passive filters on each channel that attenuate HART communication signals, permitting pass-through of the analog signal to analog I/O
- Two Ethernet ports (on the NIM) that let you place the multiplexer into service in a daisy chain topology, or in a daisy chain loop with RSTP enabled
- Capacity to receive IP address settings from a DHCP or BootP server
- Embedded web page diagnostics
- Custom configurable operating parameter settings—via Advantys configuration software
- An Ethernet interface to a HART master, for example, asset management software resident on a PC
- A fieldbus interface over Ethernet, such as Modbus TCP, which lets a PLC connect to a HART instrument and access instrument process variables and status

HART Multiplexer Functions

The Role of a Multiplexer

The STB HART multiplexer facilitates the transmission of HART field instrument data as follows:

- the multiplexer provides one-to-many communications between:
  - a HART master device, for example, asset management software resident on a PC, and
  - multiple HART slave devices (for example, HART field instruments)
- the multiplexer provides HART instrument data to a secondary fieldbus—such as Modbus TCP—where it is made available to the fieldbus master, for example a PLC.

Multiplexer Component Functions

The HART multiplexer component modules perform the following functions:

- The STB AHI 8321 HART interface module is a passive device that can pass through the analog transmission between an analog field instrument and an analog I/O module. A single HART interface module can be placed into up to four 4-20 mA current loops (or channels)—one instrument per channel
- The STB AHI 8321 HART interface module receives a combined analog and digital signal from each connected HART instrument.
- The STB AHI 8321 HART interface module filters out the digital HART signal and, if connected to an analog I/O module, passes the analog portion of the signal to the I/O module.
- The STB AHI 8321 HART interface module uses the digital signal to cyclically poll the HART instrument for HART data. The HART data describes the status of each channel and the connected HART instrument.
- Each STB AHI 8321 HART interface module forwards HART data—contained in digital signals received from a HART instrument—to a HART enabled Ethernet network interface module, for example, the STB NIP 2311.
- The HART enabled Ethernet NIM stores the HART data received from each HART interface module located in the multiplexer island. The network interface module makes this data available as follows:
  - HART data is available to asset management software (AMS) running on a PC connected to the NIM via Ethernet.
  - Some of the HART data is stored in registers and becomes part of the island data process image. You can access this data via the PLC, and in the network interface module web pages.

- The HART enabled Ethernet NIM also processes asynchronous commands it receives from HART master devices. These commands instruct the HART instrument to read, write, or reset data values, including instrument configuration and diagnostic data. The network interface module forwards the command to the target HART instrument and returns the response to the master.

NOTE: HART master devices include:

- Asset management software (AMS) running on a connected PC. AMS is referred to as a primary HART master, that can send both read and write commands.
- Hand-held devices that are temporarily attached to the control loop on the instrument side of the HART multiplexer. Referred to as a secondary HART master, a hand-held device can also send both read and write commands.

Multiplexer Data Flow

The Path from HART Field Instrument to Analog I/O

The HART multiplexer is a passive, pass-through device placed between analog HART field instruments and analog I/O modules.

The physical location of the I/O does not matter. The I/O can be an STB I/O module that resides in the STB HART multiplexer island. Or it can be a module that resides in a Quantum, Premium, M340, or third-party platform rack.

NOTE: In the following data flow diagram, the Ethernet transmission is performed via Modbus TCP. The PC with asset management software is equipped with serial-to-Ethernet connector software.

The following figure outlines the flow of data for non-HART tolerant I/O:

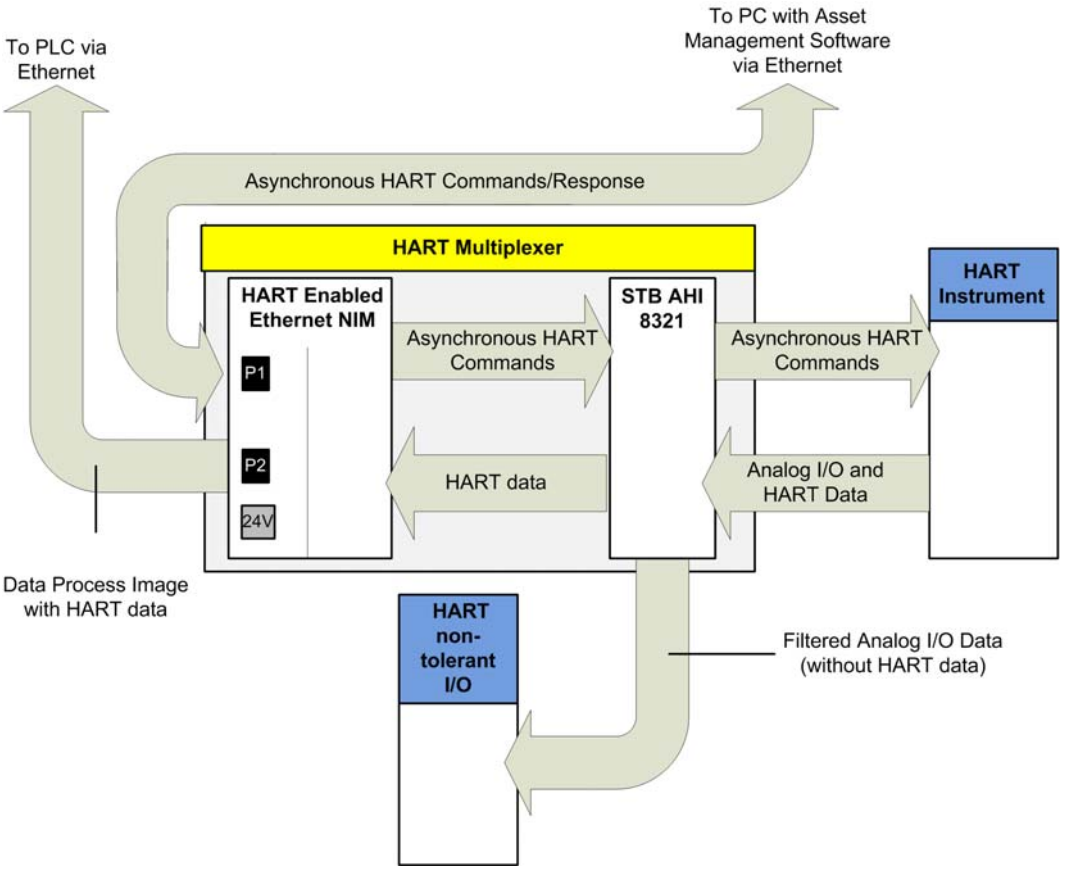

I/O Placement

For both HART tolerant I/O and non-HART tolerant I/O, the physical location of the I/O can vary. The I/O can be an STB analog I/O module that resides in the STB HART multiplexer island. Or it can be an analog I/O module that resides in a separate rack. Typical I/O placement locations include the following:

Placement of I/O modules	Platforms	Use this design for...
The STB HART multiplexer island	STB	New STB networks
A separate I/O drop	• STB • M340 • Premium • Quantum • Third party platforms	Existing networks

You can create a topology that combines both designs and places analog I/O modules both in the multiplexer island and in a separate I/O drop.

Planning the HART Multiplexer

3

Introducing the STB HART Multiplexer

The HART multiplexer is a specific-purpose STB island. An STB HART multiplexer island is a modular distributed I/O system. This chapter describes how to plan the installation of an STB HART multiplexer island.

What Is in This Chapter?

This chapter contains the following topics:

Island Segments

The Primary Segment

Every HART multiplexer island begins with a group of interconnected devices called the *primary segment*. The primary segment consists of the island NIM and a set of interconnected module bases attached to a DIN rail. The PDMs, auxiliary power supplies, I/O, and HART interface modules reside in these bases on the DIN rail. The NIM is the first (leftmost) module in the primary segment.

Depending on your needs, you can expand the island to include additional segments of STB modules, called *extension segments*.

The DIN Rail

The NIM and the module bases snap onto a 35 mm (1.38 in) wide, conductive metal, DIN rail:

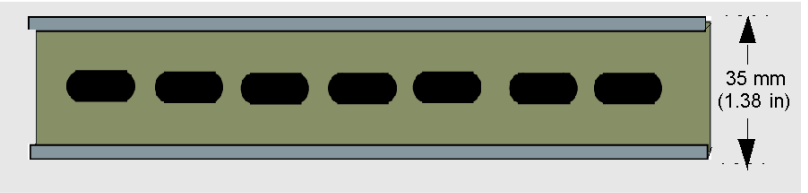

The Bases

The bases provide the physical connections between modules on the island bus. These connections enable communication between the NIM and other island modules. A set of contacts on the side of each base transmit:

- logic power from the NIM, from a beginning of segment BOS module, or from an auxiliary power supply
- sensor power (for inputs) from the PDM
- actuator power (for outputs) from the PDM]
- the auto-addressing signal
- island bus communications between the NIM and other island modules, including I/O and HART interface modules

There are seven types of bases that can be used in a segment. For a specific module, use only the base required by that module.

NOTE: When you buy a module, it is packaged as a part of a kit that includes the base for that module.

When constructing the island bus, install the bases in the same left-to-right sequence as the modules they will support.

Bases come in several sizes *(see page 69)*. For example, the STB AHI 8321 HART interface module uses a size 3 base. The following graphic depicts typical base components, in this case an STB XBA 1000 size 1 base:

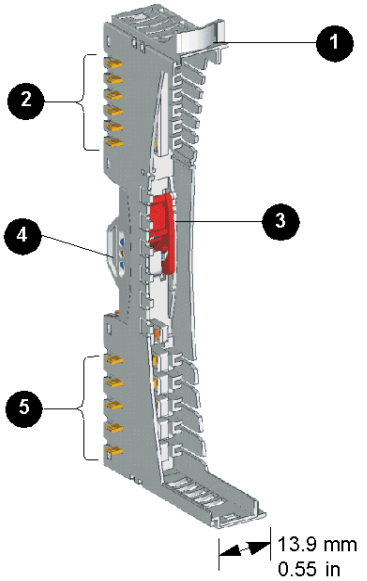

1 user-customizable label tab
2 six island bus contacts
3 DIN rail lock/release latch
4 DIN rail contact
5 five field power distribution contacts

As you assemble the island bus, insert the correct base in each specific island location.

The Island Bus

The module bases that you interconnect on the DIN rail form an island bus structure. The island bus houses the modules and supports the communications buses across the island.

The NIM, unlike the PDMs and I/O modules, attaches directly to the DIN rail.

When an STB system consists of a single primary segment, terminate the island by placing an STB XMP 1100 terminator plate (which is included in the NIM packaging) in the right-most island position. If a second segment is added, replace the terminator plate with an STB XBE 1100 end of segment (EOS) extension module.

The structure of a single-segment island bus:

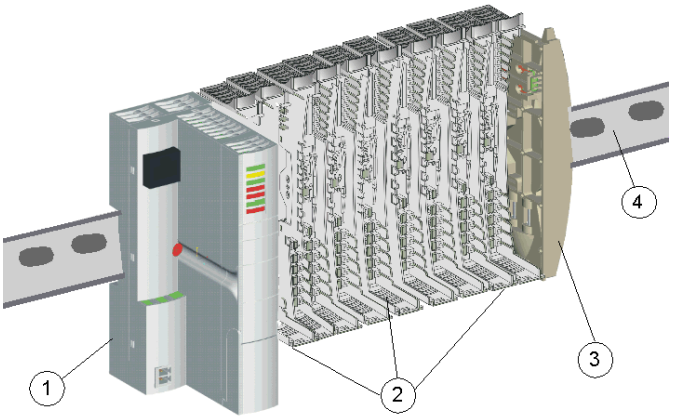

1 NIM
2 module bases
3 termination plate
4 DIN rail

An Example of an STB Island

The following illustration presents a multiplexer island bus with standard STB modules.

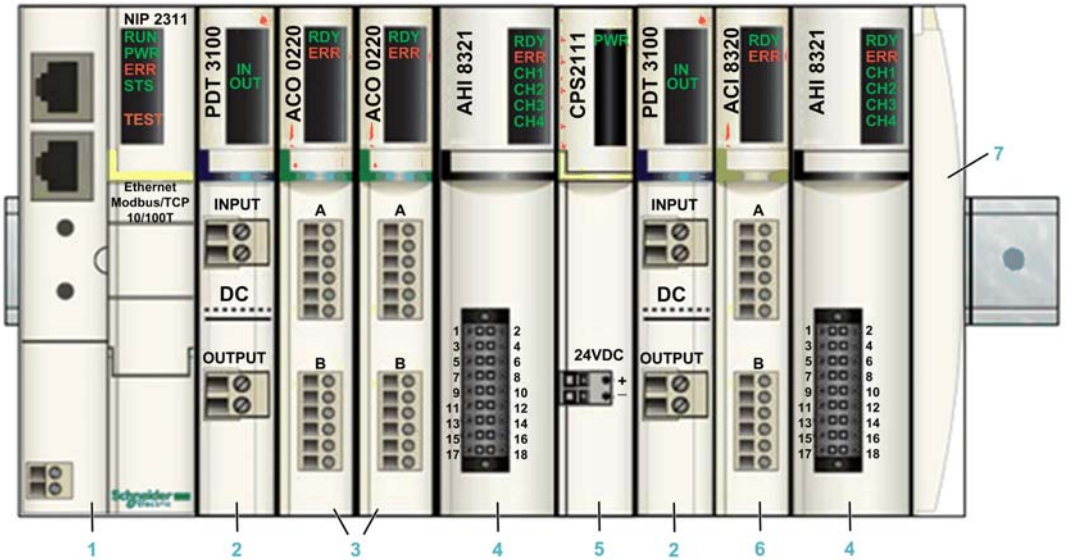

1. The NIM in the first location of the segment. The NIM provides 5 Vdc logic power to the I/O and HART interface modules located between the NIM and the STB CPS 2111 auxiliary power supply.
2. Two 24 Vdc STB PDT 3100 power distribution modules. One is installed directly to the right of the NIM; the other is installed to the right of an STB CPS 2111 auxiliary power supply. The NIM distributes DC power over the sensor and actuator buses to the I/O directly to its right. The auxiliary power supply supplies DC power to the single input module to its right.
3. Two STB ACO 0220 2-channel output modules, which receive DC field power from the island actuator bus. The 4-20 mA current loops from these modules pass through the adjacent STB AHI 8321 HART interface module. Each current loop is connected to a HART field instrument.
4. Two 4-channel STB AHI 8321 HART interface modules. The first (leftmost) HART interface module is connected via pass-through wiring to current loops (or channels) on the two 2-channel output modules. The second (rightmost) HART interface module is connected to current loops (or channels) on the single 4-channel input module.
5. An STB CPS 2111 auxiliary power module, which provides 5 Vdc logic power to the I/O and HART interface modules located to its right.
6. An STB ACI 8320 4-channel input module, which receives DC field power from an external 24 Vdc power supply. Each current loop is connected to a single HART field instrument. The four 4-20 mA current loop signals from this module connect to the STB AHI 8321 HART interface module on the same even numbered pins used by the HART field instrument(s).
7. An STB XMP 1100 terminator plate

Network Interface Module Functions

The first module on the HART multiplexer primary segment is a HART-enabled Ethernet NIM, for example the STB NIP 2311. The NIM performs several key functions:

- It is the master of the island bus, supporting the I/O and HART interface modules by acting as their communications interface across the bus.
- It is the gateway between the island and the fieldbus on which the island operates. It manages the data exchange between the island modules (including both I/O and HART interface modules) and the fieldbus master.
- It is the gateway between HART asset management software (resident on a dedicated PC connected via Ethernet) and both the island HART interface modules and the HART field devices.
- It provides an interface to the Advantys configuration software, which you can use to customize the island configuration.
- It is the primary power source for logic power on the island bus, delivering 5-Vdc logic power to modules in the primary segment.

Power Distribution Modules

The second module on the primary segment is a PDM *(see page 47)*. If the STB island is intended to perform only as a HART multiplexer, it requires only 24 Vdc field power for the modules in a segment.

NOTE: If digital I/O is required for the island, refer to the *Advantys STB System Planning and Installation Guide* for information on how to supply 24-Vdc power to digital I/O.

I/O Modules

An STB HART multiplexer island can include resident analog 24 Vdc input modules and output modules.

I/O Module Logic Power

Logic power is the power that the STB I/O modules require to run their internal processing and light their LEDs.

The NIM converts the incoming 24 Vdc to 5 Vdc. The NIM then distributes the 5 Vdc as logic power for the primary segment *(see page 52)*. A similar power supply built into the beginning of segment (BOS) modules provides 5 Vdc for the I/O modules in any extension segments.

Each power supply produces 1.2 A. If the sum of the logic power current consumed by the I/O modules in a segment exceeds that value, you can insert an auxiliary power supply (for example, the STB CPS 2111) to provide an additional 1.2A of power to the modules located to its right. Therefore, the total current draw *(see page 56)* determines the number of power supplies required by a segment.

The Last Device on the Primary Segment

If the STB island consists of only a single (primary) segment, terminate the island bus by placing an STB XMP 1100 terminator plate at the end of the segment.

Extending the Island Bus

If you elect to extend the island bus *(see page 40)* to another segment, terminate the primary segment with an STB XBE 1100 EOS bus extension module.

The EOS module has an IEEE 1394-style output connector for a bus extension cable. The extension cable carries the island communications bus and auto-addressing line to the extension segment or to the preferred module.

Extending the Island Bus

Why Extend the Island Bus?

There are two reasons for adding extension segments to the island bus:

- to place island modules near to the actuators, sensors, and other end devices with which the island modules communicate
- the physical length of the island exceeds the size of the cabinet

An example of a primary island segment with an extension segment:

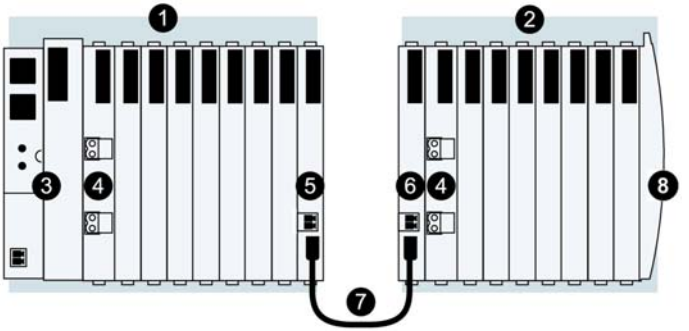

1 Primary island segment
2 Extension segment
3 Network interface module (NIM)
4 Power distribution module (PDM)
5 STB XBE 1100 EOS module
6 STB XBE 1300 BOS module
7 STB XCA 100x extension cable
8 Island bus termination plate

Maximum Length Considerations

The maximum electrical length of an island bus is 15 m (49.2 ft) end-to-end. The maximum length computation includes:

- The width of every STB module in every segment
- Every extension cable connecting island segments to:
  - other island segments
  - preferred modules

The maximum island bus length does not include the space required for supporting devices, such as external 24-Vdc power supplies. Also, maximum bus length does not include space required for the wiring between these devices and the island.

Maximum Number of Extension Segments

An island bus can support up to six extension segments of STB modules in addition to the primary segment. Extension segments can be installed on the same, or on separate DIN rails.

Enclosing the HART Multiplexer

Open System Requirement

STB modules meet CE mark requirements for open equipment. Schneider Electric recommends that you install the multiplexer in an enclosure that meets NEMA 250 type 1 requirements and IP 20 requirements conforming to IEC 529. Use of an enclosure is recommended to help reduce the likelihood of:

- unauthorized access
- personal injury resulting from access to live parts

Consider the specific environmental conditions under which the modules operate when planning the enclosure.

Size of the Enclosure

Verify that the size of the enclosure is large enough to house the modules included in the island. To fit more easily into the enclosure, you may want to divide the HART multiplexer island into multiple island segments, then arrange the segments horizontally.

A single HART multiplexer island supports up to 32 analog I/O channels, and includes:

- one NIM
- up to 32 analog modules, including analog I/O and HART interface modules
- PDMs, auxiliary power supplies, and EOS/BOS modules as needed

Module Dimensions

STB modules come in three widths, and present the following dimensions:

Module type	Width of module	Height of module in base	Depth of module in base with field connectors
1	13.9 mm (.55 in.)	128.25 mm (5.05 in.)	75.5 mm (2.97 in.)
2	18.4 mm (.73 in.)	128.25 mm (5.05 in.)	75.5 mm (2.97 in.)
2-PDM	18.4 mm (.73 in.)	137.90 mm (5.45 in)	79.5 mm (3.13 in.)
3	28.1 mm (1.11 in.)	128.25 mm (5.05 in.)	70.1 mm (2.76 in)

In addition to the module depth and height dimensions, above, consider the dimensions of external power supplies or other equipment—not described above—that you may attach to your island.

STB Modules Size & Base Type

Each STB module comes packaged with the base that is appropriate for that module. Use the base unit that comes with your module. If you need to replace a base unit for any reason, refer to the following table:

Model	Type	Base	Model	Type	Base
Analog Input Modules			**Analog Output Modules**		
STB ACI 0320	2	STB XBA 2000	STB ACO 0120	2	STB XBA 2000
STB ACI 8320	2	STB XBA 2000	STB ACO 0220	2	STB XBA 2000
Power Distribution Modules			**Special Purpose Modules**		
STB PDT 3100	2	STB XBA 2200	STB AHI 8321	3	STB XBA 3000
STB PDT 3105	2	STB XBA 2200	STB XBE 1100	2	STB XBA 2400
STB CPS 2111	2	STB XBA 2200	STB XBE 1300	2	STB XBA 2300

Spacing Requirements

Maintain adequate clearance between the modules installed in the enclosure and surrounding fixed objects such as wire ducts and inside surfaces. The following two illustrations depict the spacing requirements within an enclosure

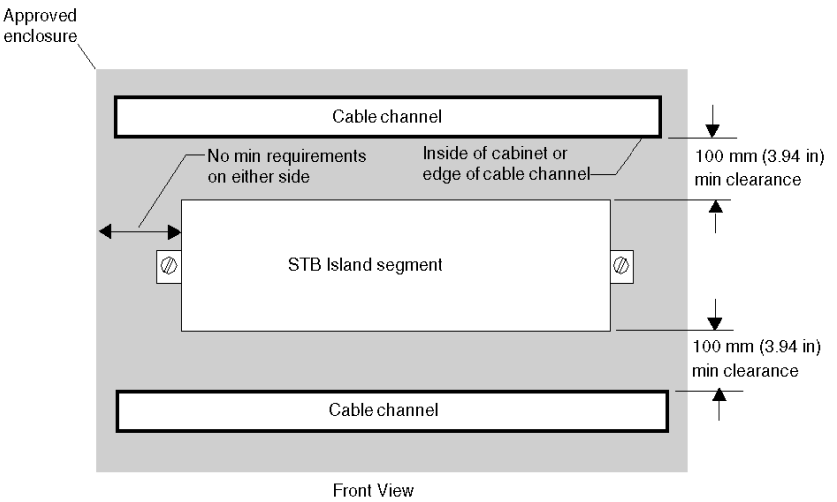

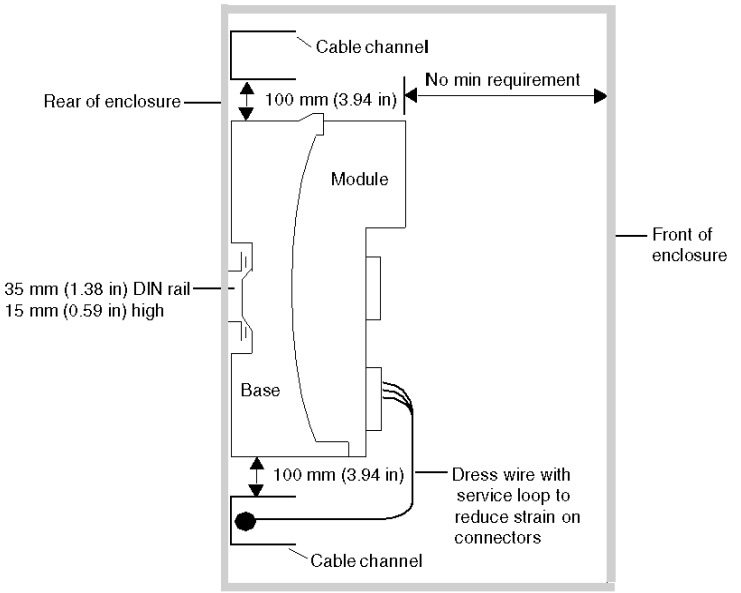

Side View

NOTE: The preceding graphic is not drawn to scale.

Mounting

Mount the island on one or more 35 mm (1.38 in) wide DIN carrier rails.

Install the metal DIN rail by:

- attaching it to a flat metal mounting surface
- mounting it on an EIA rack
- mounting it in a NEMA cabinet enclosure

The standard DIN rail is 35 mm x 15 mm (1.38 in x 0.59 in) deep.

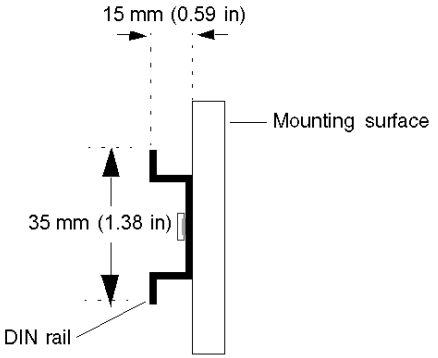

Use M5 threaded mounting hardware to affix the DIN rail to the mounting surface. Allow a maximum spacing of 150 mm (5.91 in) between each mounting hardware.

Wiring

Install wiring so that it does not obstruct the 100 mm (3.94 in) of free air space above and below the island segment. Tie down the wiring to help guard against undue load or strain on the STB modules. Use a service loop to dress the leads from a harness or cable channel. This practice helps reduce strain on the module.

Thermal Considerations

For proper heat dissipation, allow a minimum clearance of 100 mm (3.94 in) above and below each island segment. Allow the unobstructed flow of air to the vent openings on the top and bottom of the modules.

The following list presents some worst-case values for estimating the wattage dissipation when you plan the cooling for your system and cabinet enclosure:

Module Type	Base Type	Worst-case Wattage Value
inputs	type 1	1.5 W
	type 2	2.75 W
	type 3	3.5 W
outputs	type 1	1.0 W
	type 2	2.25 W
	type 3	3.5 W
HART interface module	type 3	3.5 W
EOS	type 2	1.0 W
BOS	type 2	2.5 W
auxiliary power supply	type 2	2.5 W
DC PDM	type 2 - PDM	1.5 W
NIM		3.5 W

These values assume elevated bus voltage, elevated field-side voltage and maximum load currents. Typical wattage values are often lower.

The Power Distribution Modules

Functions

The power distribution module (PDM) supplies field power to the input and output modules resident on the island. Standard PDM modules can distribute sensor power and actuator power via the same or separate power lines across the island bus.

The PDM includes a user-replaceable fuse that helps protect both the island input and output modules, and the wiring. It also provides a protective ground (PE) connection for the island.

Positioning

The HART multiplexer, like other STB islands, requires the placement of a PDM immediately to the right of the NIM, BOS or auxiliary power supply. Depending on the number of input and output modules resident on the segment, additional PDMs can be required. The placement of a PDM to the right of a module group terminates the sensor and actuator buses for the preceding (leftward) module group.

Selecting a PDM

If you are building an STB island to serve exclusively as a HART multiplexer, you will need to include only 24 Vdc analog I/O modules. There are two PDMs that can supply 24 Vdc power:

- the STB PDT 3100 standard module
- the STB PDT 3105 basic module

Standard versus Basic PDMs

When you use a standard PDM, the PDM separately provides power to:

- the island sensor bus, for the input modules in its group
- the actuator bus, for the output modules in its group

When you use a basic PDM, the PDM simultaneously provides power to both the sensor bus and the actuator bus.

The standard PDM can also handle more current than a basic PDM.

Standard PDM Power Distribution

Place a PDM immediately to the right of the NIM (or BOS or auxiliary power supply) on the island. The modules in the group follow in series to the right of the PDM.

NOTE: The illustrations presented below are simplified drawings that focus on a single island feature. They may not display every necessary component.

The following simplified illustration shows a STB PDT 3100 PDM supporting a cluster of analog 24 Vdc I/O modules:

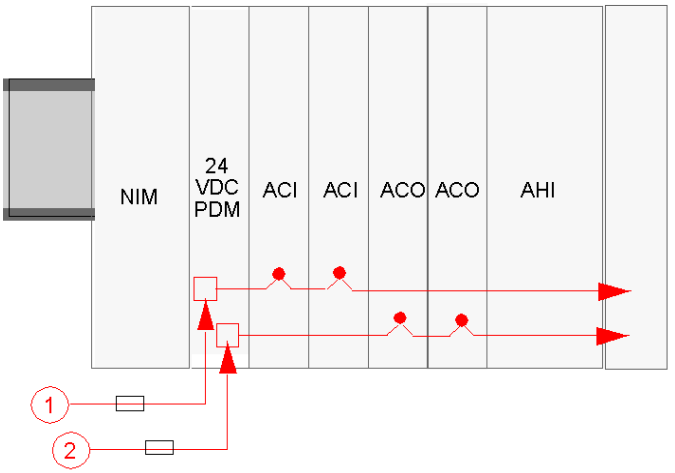

1 24 Vdc sensor power signal to the PDM
2 24 Vdc actuator power signal to the PDM

Sensor power (to the input modules) and actuator power (to the output modules) are brought to the island (from an external 24 Vdc power supply) via separate two-pin connectors on the PDM.

In the following simplified illustration, an STB CPS 2111 auxiliary power supply is placed directly to the right of the last I/O module in the first module group, to provide additional logic power *(see page 52)* to the island. A second PDM is then required to provide power for new sensor and actuator buses for the 24 Vdc modules to the right of the second PDM:

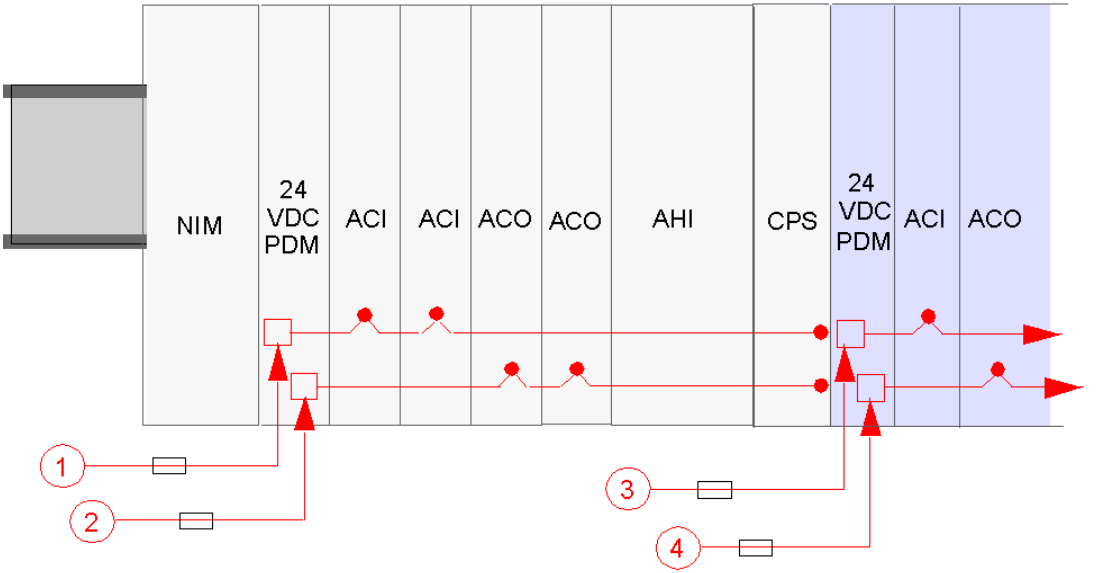

1 24 Vdc sensor power signal to the PDM (first module group)
2 24 Vdc actuator power signal to the PDM (first module group)
3 24 Vdc sensor power signal to the PDM (second module group)
4 24 Vdc actuator power signal to the PDM (second module group)

Each standard PDM contains a pair of time-lag fuses:

- a 10 A fuse for the actuator bus
- a 5 A fuse for the sensor bus

These fuses are user-replaceable.

Basic PDM Power Distribution

If your island uses an STB PDT 3105 basic PDM, power is sent from a single power source (in the PDM) to the sensor bus and the actuator bus. The sensor and actuator busses join together in the PDM. In the following illustration, two basic STB PDT 3105 PDMs are used to provide actuator power and sensor power to two separate groups of I/O:

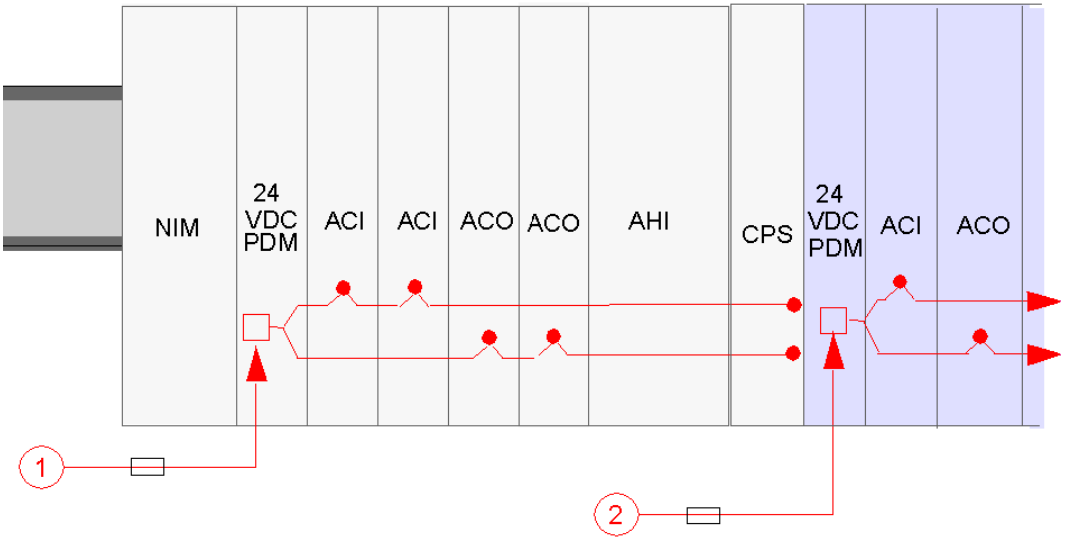

1 24 Vdc actuator and sensor power to the first (leftmost) module group
2 24 Vdc actuator and sensor power to the second (rightmost) module group

Each basic PDM contains one 5 A time-lag fuse that is user-replaceable.

PE Grounding

A captive screw terminal on the bottom of the PDM base connects to each I/O base, establishing an island PE bus. The screw terminal on the PDM base meets IEC-1131 requirements for field power grounding. Wire the screw terminal to the PE point on your system.

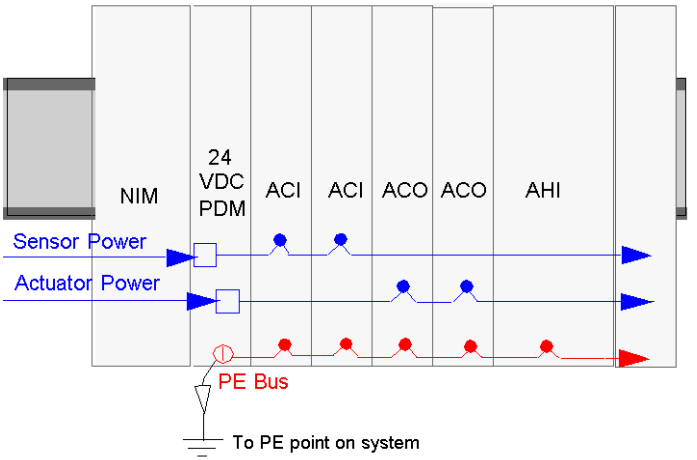

Logic, Sensor, and Actuator Power Distribution on the Island Bus

Logic Power

The NIM requires an external supply of 24 Vdc power. The NIM converts the supplied 24 Vdc, then provides 5 Vdc logic power to the I/O and HART interface modules in the primary island bus segment.

NOTE:

The illustrations presented below are simplified drawings that focus on a single island feature. The illustrations may not display every necessary component.

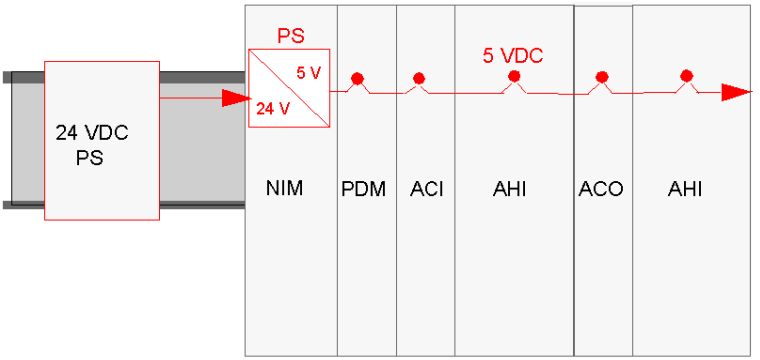

The NIM can supply maximum current of 1.2 A to the island segment modules. If your island design requires more power than the NIM can provide, you can:

- install an STB CPS 2111 auxiliary power supply to provide additional logic power to the remaining (rightward) modules.
- segment the island: Remove some modules from the primary segment to reduce the current draw on that segment to less than 1.2 A. Place these modules into an island extension segment with a BOS.

BOS and auxiliary power supply modules on STB island extension segments require their own 24 Vdc logic power source. This source can come either from the same power supply used by the primary island segment, or from an additional one. The same 1.2 A current limit applies to each extension segment. If a segment exceeds the 1.2 A current draw limit, auxiliary power supplies can also be added to the extension segment.

Here is an illustration of the extension segment scenario:

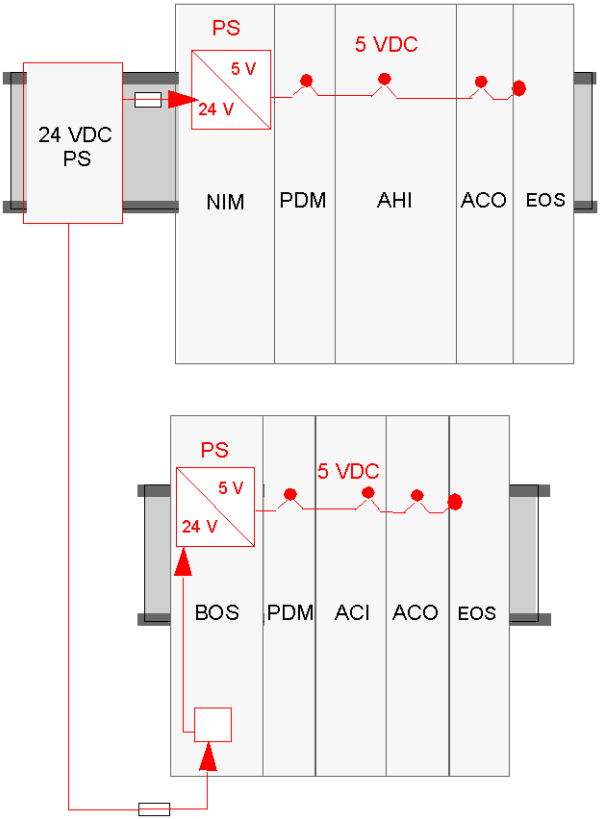

Operating voltages for the island range from 19.2 Vdc to 30 Vdc.

The power components are not galvanically isolated. Use them only in systems designed to provide SELV isolation between:

- the supply inputs or outputs, and
- the load devices or system power buses

⚠ CAUTION

IMPROPER GALVANIC ISOLATION

Use SELV-rated supplies to provide 24 Vdc source power to the NIM.

Failure to follow these instructions can result in injury or equipment damage.

Sensor and Actuator Power

For standard PDMs, provide power to the island sensor and actuator buses separately from external sources. The source power is fed to separate two-pin power connectors on the PDM.

- The top connector is for the sensor (input) power bus.
- The bottom two-pin connector is for the actuator (output) power bus

Depending on your application, you can use the same or different external power supplies *(see page 60)* to feed the 24 Vdc sensor and the actuator busses.

For basic PDMs, provide power to both the sensor and actuator buses via a single two-pin power connector on the PDM.

24 Vdc Field Power Distribution

In the following illustration, an external power supply delivers 24 Vdc power to an STB PDT 3100 PDM. The PDM, in turn, distributes field power to the island sensor and actuator busses:

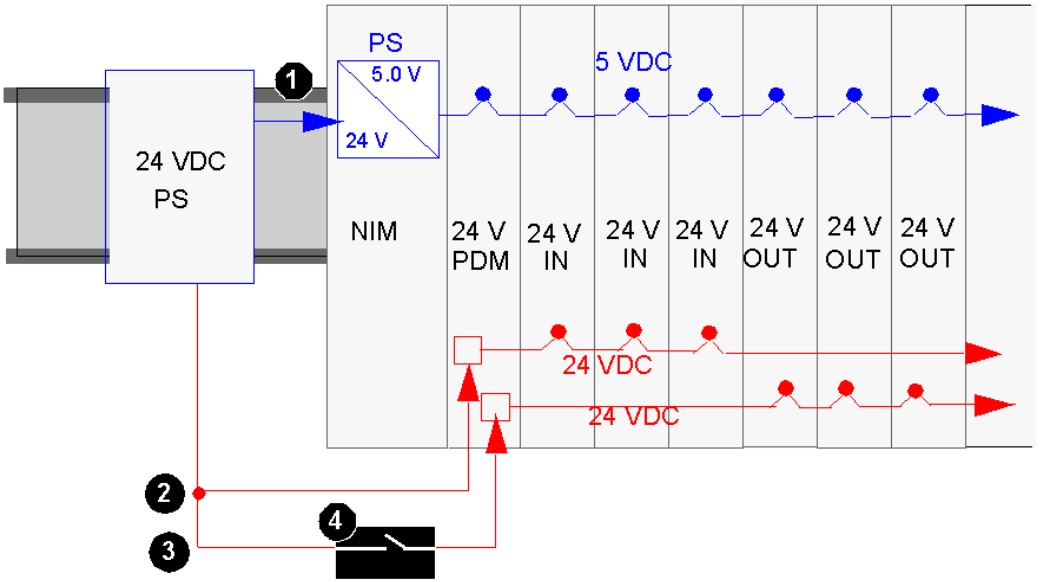

1 24 Vdc signal to the NIM logic power supply
2 24 Vdc signal to the segment sensor bus
3 24 Vdc signal to the segment actuator bus
4 optional relay on the actuator bus

Above 130 Vac, the relay module may compromise the double insulation provided by a SELV-rated power supply.

⚠ CAUTION

COMPROMISED DOUBLE INSULATION

When you use a relay module, use separate external 24 Vdc power supplies for the PDM supporting that module and the logic power to the NIM or BOS module when the contact voltage is above 130 Vac.

Failure to follow these instructions can result in injury or equipment damage.

You can use the same power supply for both logic power and field power when:

- the I/O load on the island bus is low, and
- the system is operating in a low electromagnetic noise environment

Understanding Multiplexer Island Power Supply and Consumption

Overview

When you design your HART multiplexer, consider:

- the combined capacity of modules that supply logic, sensor and actuator power to the island, and
- the load requirements of each module—including I/O modules and HART interface modules—that consume the supplied power

The operating temperature ranges for the STB HART multiplexer modules are listed in the following tables. The listed modules are designed to operate in an environment where the ambient temperature is in the range 0...60° C (32...140° F).

Input Voltage Power Supply Temperature Range Variations

Input voltage for NIMs, STB XBE 1300, STB XBE 1100, STB CPS 2111, STB PDT 3100 modules, and external power supplies can vary with temperature. For the normal operating temperature range of 0...60°C, the supply voltage range is 19.2...30 Vdc

NIM, BOS & Auxiliary Power Supply Modules

The operating temperature ranges for the STB NIM, BOS, and Auxiliary Power Supply modules are as follows:

NIM, BOS, and Auxiliary Power Supply Modules			
Model	**Product Version**	**Type**	**Logic Bus Current Supply at 0...60°C**
STB NIP 2311	4.0	Dual Port Ethernet MB TCP/IP NIM standard	1.2 A
STB CPS 2111	N/A	Auxiliary Power Supply	1.2 A
STB XBE 1300	N/A	BOS Extension Module	1.2 A

Check the front of the NIM *(see page 11)* to confirm that it is product version 4.0 or higher.

Analog I/O Modules

The heat generated by the following STB analog I/O modules is, under normal operating conditions, noticeably greater than the other STB I/O modules. The microprocessor and digital signal processor, required for these types of modules, primarily generate the heat in these modules. These components operate correctly at higher temperatures as noted by their respective manufacturers. The modules are:

- STB ACI 0320 (4 channel analog, current input)
- STB ACI 8320 (4 channel analog, current input)
- STB ACO 0120 (1 channel analog, current output)
- STB ACO 0220 (2 channel analog, current output)
- STB AHI 8321 (4 channel HART interface module)

The HART multiplexer operates in the range 0...60° C. When installing an STB island, mount the product vertically so that natural convection cooling is not impeded.

Logic bus current consumption amounts for analog modules operating in the normal operating temperature range are as follows:

Analog Input Model	**Type**	**Logic Bus Current Consumption @ 0...60°C**
STB ACI 0320	Cur, 4 ch, 4-20 mA, 16-bit standard	95 mA
STB ACI 8320	Cur, 4 ch, 4-20 mA, 16-bit standard	95 mA

Analog Output Model	**Type**	**Logic Bus Current Consumption @ 0...60°C**
STB ACO 0120	Cur, 1 ch, 4-20 mA, 16-bit standard	155 mA
STB ACO 0220	Cur, 2 ch, 4-20 mA, 16-bit standard	210 mA

Special Purpose Modules

Logic bus current consumption amounts for special purpose modules operating in the normal operating temperature range are as follows:

Special Purpose Model	**Type**	**Logic Bus Current Consumption @ 0...60°C**
STB AHI 8321	HART Interface Module	400 mA
STB XBE 1100	EOS Extension Module	25 mA

Power Distribution Modules

Field power supplied to I/O modules by the PDM operating in the normal operating temperature range are as follows.

PDM Model	Type	Field Power Supplied to I/O Modules @ 0...60°C
STB PDT 3100	24 Vdc Power Distr. standard	8.0 A
STB PDT 3105	24 Vdc Power Distr. basic	4 A

STB PDT 3100 Performance Considerations

For the STB PDT 3100 PDM, the maximum combined module current-the sum of the actuator and sensor currents-depends upon the island ambient temperature. The following diagram presents a curve that plots the module's maximum combined current against its operating temperature range.

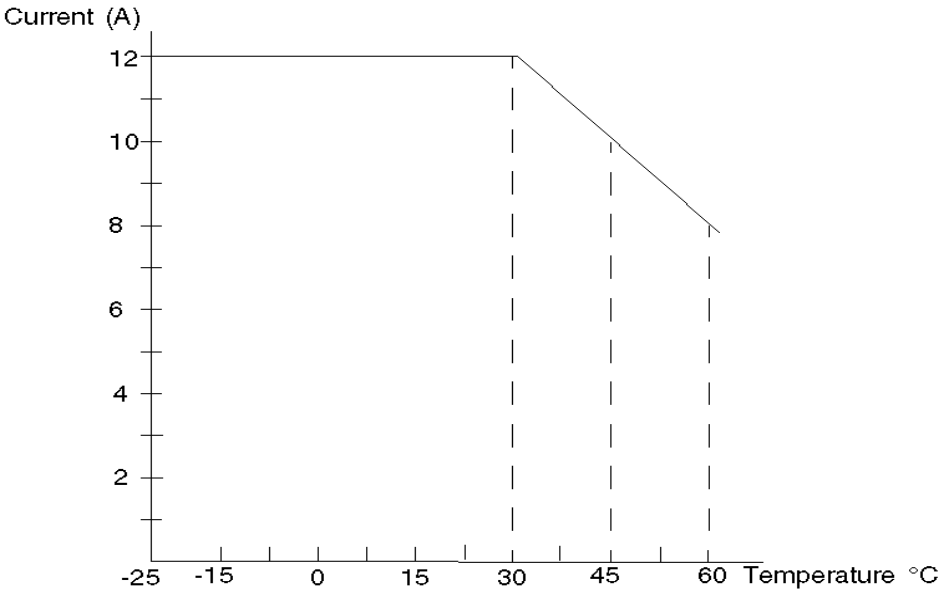

This example shows:

- At 60 °C the total maximum combined current is 8 A
- At 45 °C the total maximum combined current is 10 A
- At 30 °C the total maximum combined current is 12 A

NOTE: At any temperature, the maximum actuator current is 8 A and the maximum sensor current is 4 A.

Logic Bus Current Draw Variations

The total number of modules in a logic power supply group determines the total bus current drawn from the NIM, BOS, or auxiliary power supply. The more modules, the greater the amount of current required to support them. You can determine the total bus current required from the NIM by totaling the individual current requirements for the I/O modules residing on the island.

Verify that the total bus current value is within the allowable current draw range listed for the particular type of NIM module installed on the island. If the logic bus current draw exceeds the capacity of the NIM, either:

- divide the island segment into smaller segments, or
- add an auxiliary power supply to the segment

Selecting Power Supplies

Overview

The power components are not galvanically isolated. They are for use only in systems designed to provide SELV isolation between the supply inputs or outputs and the load devices or system power bus.

⚠ CAUTION

IMPROPER GALVANIC ISOLATION

- Use SELV-rated supplies to provide 24 Vdc source power to the NIM and any BOS or auxiliary power supply modules in your system
- If you are using a relay module with a contact voltage above 130 Vac, do not use a common external 24 Vdc power supply for the PDM supporting that module and the logic power in the NIM, auxiliary power supplies, or BOS modules
- Above 130 Vac, the relay module defeats the double insulation provided by a SELV-rated power supply

Failure to follow these instructions can result in injury or equipment damage.

In an STB island, there can be three different connections that need 24 Vdc power from an external source:

- logic power connection (to the NIM, to any auxiliary power supplies, and to any BOS extension modules in the island)
- actuator power connection (to a PDM)
- sensor power connection (to a PDM)

Source power for these power connections can come from one or more supplies. The following considerations should be considered when selecting your power options:

- field devices
- voltage and current needs
- isolation requirements
- EMI/RFI suppression needs
- CE requirements
- cost limitations

Logic, Sensor, and Actuator Power

Use external 24 Vdc power to support the logic, sensor, and actuator requirements of each segment in your STB island.

For a standard STB PDT 3100 or a basic STB PDT 3105 PDM, verify that the power supplies you choose operate within a voltage range bounded by:

- a lower voltage limit of 19.2 Vdc
- an upper voltage limit of 30 Vdc

Wattage Requirements

Supply the NIM with at least 13 W of power. If your island uses a BOS or an auxiliary power supply, supply each such module on your island with at least 7 W of power.

NOTE: If the 24 Vdc source power supply also supplies field voltage to a PDM, add the field load to your wattage calculation. For 24 Vdc loads, the calculation is: *amps* x *volts* = *watts*.

Recommended Supplies

We recommend the Phaseo ABL8 family of 24 Vdc power supplies. Here are several possible power supply solutions to consider:

- one supply for 4-20 mA current loop power: ABL8 MEM 24003
- one supply for three connections (logic power, actuator power, and sensor power): ABL8 RPS 24100
- two supplies for three connections (one for logic power, one for actuator and sensor power
  For logic power: ABL8 RPS 24030
  For the 24 Vdc PDM: ABL8 RPS 24100
- three supplies for three connections (one for logic power, one for actuator power and one for sensor power)
  For logic power: ABL8 RPS 24030
  For the 24 Vdc PDM sensor: ABL8 RPS 24050
  For the 24 Vdc PDM actuator: ABL8 RPS 24100

For more information on recommended 24 Vdc Phaseo power supplies, contact your Schneider Electric representative and ask for brochure 8440BR1001.

Building the Multiplexer

4

Overview

This chapter describes how to assemble the physical components comprising an STB HART multiplexer.

What Is in This Chapter?

This chapter contains the following topics:

Installing the DIN Rail

Carrier Rails for the Island Bus

The STB modules are designed for mounting on 35 mm x 15 mm (1.38 in x 0.59 in) deep DIN rail conforming to IEC 60715. The use of 15 mm deep DIN rail is required to achieve the stated system performance specifications. As shown on the following illustration, install M5 threaded mounting hardware at the end positions and at 150 mm (5.91 in) maximum increments along the length of the rail.

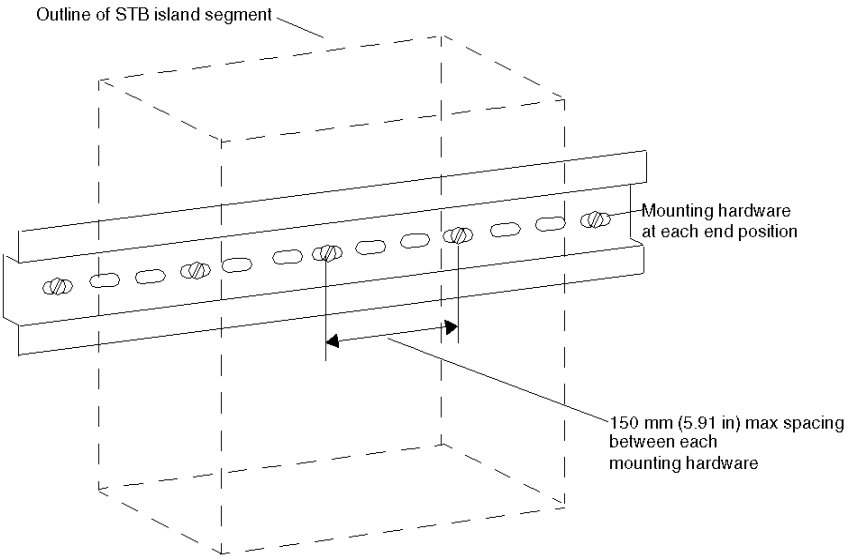

Low profile 7.5 mm (0.30 in) deep DIN mounting rail can be used with low profile mounting hardware such as flat head screws, with countersunk mounting holes.

NOTE:

- Mount the DIN rail on a grounded metal plate.
- If you use low profile 7.5 mm deep DIN rail, the fastener screw head cannot protrude more than 1.0 mm (0.04 in) above the DIN rail.

Grounding Function

The DIN rail provides the functional ground *(see page 84)* across the island.

Installing the HART Enabled Ethernet NIM

The First Module on the Island Bus

Every STB island includes a single NIM. It is the first (leftmost) module on the DIN rail in the primary island segment. For the HART multiplexer island, use only a HART enabled Ethernet NIM, such as the STB NIP 2311 version 4.0 and higher.

How to Install the NIM

Unlike other STB modules, the mounting base of the NIM is permanently attached to the module. Install the NIM on the DIN rail in one piece, as follows:

Step	Action
1	Determine the exact location on the DIN rail where you want to position the NIM before you place it on the rail. **NOTE:** Reserve sufficient space to the right of the NIM for the other island modules you want to mount on the DIN rail. In addition, reserve space for any DIN-mounted external devices you plan to use, for example, power supplies.
2	Turn the release screw (2) on the NIM so that the mounting clips on the back are in their relaxed state. 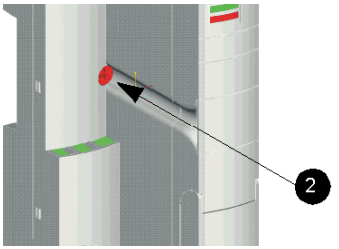

⚠ CAUTION

UNINTENDED EQUIPMENT OPERATION

Do not slide the NIM along the DIN rail. Sliding the NIM can crush the functional ground (FE) contacts on the back of the NIM. Crushed FE contacts can prevent the creation of the FE connection

Failure to follow these instructions can result in injury or equipment damage.

Step	Action
3	Align the mounting clips with the DIN rail and push the NIM onto the rail. The slope of the mounting clips causes the rail to open the clips when you apply light pressure. 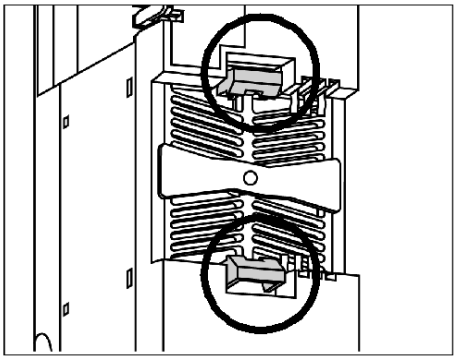
4	When the module is pushed completely on to the rail, the clips snap closed. 

For instructions on how to remove the NIM, refer to the *Advantys STB System Planning and Installation Guide*.

FE Contacts

One of the roles of the DIN rail is to provide a FE for the modules on the island. FE helps protect the island from radio frequency interference (RFI) and electromagnetic interference (EMI). The contacts on the back of the NIM, (3), make the functional ground connection between the rail and the NIM.

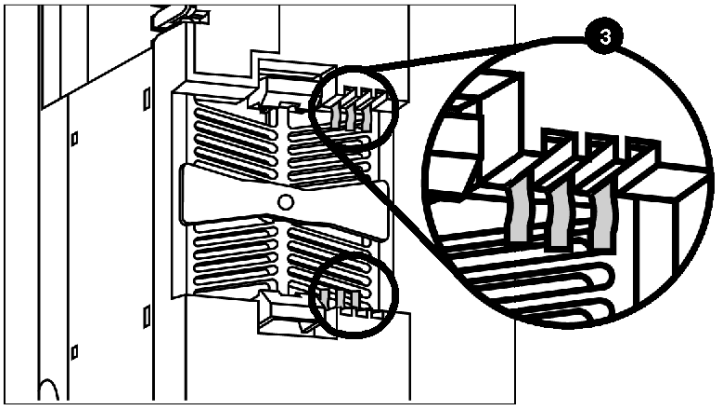

Creating the Backplane of the Island Bus

Installation Plan

To help you install island modules in the correct sequence, create an installation plan before you begin the actual installation process. A useful installation plan describes:

- the sequence of modules
- the base required for each module

It is also helpful to use the STB XMP 6700 marking label kit to identify the module you plan to add to each base

Interlocking Base Units on the DIN Rail

After you attach the NIM to the DIN rail, create the island back plane by interconnecting the proper sequence of base units.

Start directly to the right of the NIM with a PDM base unit. Then add a series of base units for the modules you plan to add to the island. Base units are installed from left to right along the rail. These base units together with the NIM form the backplane for the primary segment of the island.

The following illustration depicts features that relate to connecting base units to the DIN rail.

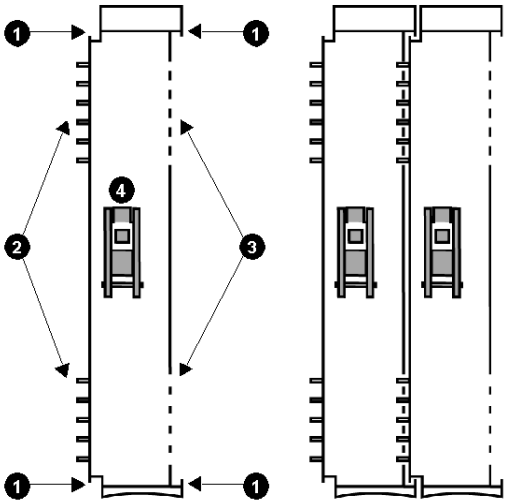

1 Interlocking channels
2 Contacts
3 Contact channels
4 DIN rail latch

The Base Units

The following table lists the base types.

Base Model	Base Width	STB Modules It Supports
STB XBA 1000	13.9 mm (0.53 in)	size 1 I/O modules
STB XBA 2000	18.4 mm (0.71 in)	size 2 I/O modules
STB XBA 2100	18.4 mm (0.71 in)	the STB CPS2111 auxiliary power supply
STB XBA 2200	18.4 mm (0.71 in)	PDMs
STB XBA 2300	18.4 mm (0.71 in)	the BOS module
STB XBA 2400	18.4 mm (0.71 in)	the EOS module
STB XBA 3000	28.1 mm (1.06 in)	the STB AHI 8321 HART interface module and other size 3 modules

How To Attach Base units to the DIN Rail

The following steps describe how to attach base units to the DIN rail. When attaching base units, proceed in a left to right direction.

Step	Action
1	Working from your installation plan, select an STB XBA 2200 base unit for the PDM to place directly to the right of the NIM.
2	Using a screwdriver, move the DIN rail latch on the base unit to its full open position. 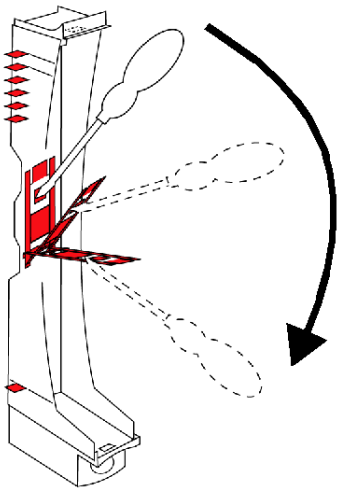

Step	Action
3	Align the contacts on the base with the contact channels on the NIM and push the base toward the DIN rail until the interlocking channels meet. Using the interlocking channels as guides, slide the base toward the DIN rail (push from the center of the base). When the base meets the DIN rail, hold the base unit firmly against the DIN rail and push the DIN rail latch into the locked position. 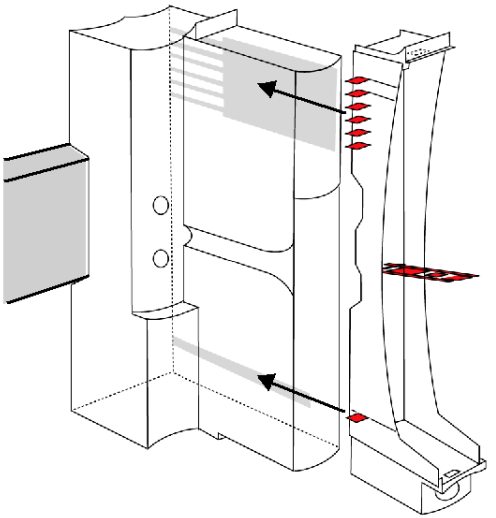
4	Working from your installation plan, select the correct base unit for the module. Insert this unit directly to the right of the previous base unit; then repeat steps 2 and 3.
5	Repeat steps 2 ... 4 until base units for all the modules in the primary segment are installed. 
6	Refer to the procedures in the next topic *(see page 71)* for information on installing the last device in the segment.

Terminating the Island Bus

One or More Segments?

Terminate the last device on the HART multiplexer island bus with an STB XMP 1100 termination plate, which is included in your NIM packaging.

- If the island bus is a single segment (without extension segments), terminate the island at the right end of the segment.
- If the island is extended *(see page 40)*, terminate only the last segment of the island bus.

Termination Options

The following table describes the different ways to terminate the island bus, depending on the type of installation.

If the island bus includes...	**then...**
A primary segment with no extension segments	Terminate the segment with an STB XMP 1100 termination plate.
A primary segment plus one or more extension segments	Install an STB XBA 2400 base at the end of the segment. This base holds an STB XBE 1100 end of segment EOS module. Terminate at the end of the last segment with an SCB XMP 1100 termination plate. The EOS module provides a connector for a bus extension cable. This cable runs to the STB XBE 1300 (BOS) module placed in the first position in the extension segment.

How to Terminate the Last Segment

To terminate the last segment on the island bus:

Step	Action
1	Align the interlocking channels at the top and bottom left of the termination plate with the channels on the right side of the last module base.
2	Using the interlocking channels as guides, slide the plate toward the DIN rail until it snaps onto the rail. 

For instructions on how to remove the termination plate, refer to the *Advantys STB System Planning and Installation Guide*.

Inserting STB Modules into their Bases

Preliminary Considerations

Each STB module slides into its base and locks with snap latches. Match each module with the base designed for use with that module. Before you install the modules in their bases, we recommend that you consult your installation plan *(see page 68)* and confirm that you have the correct base in each position on the island backplane.

If you have not already done so, use the STB XMP 6700 marking label kit to identify the module you plan to add to each base.

How to Insert a Module in a Base

To install a module into its base:

Step	Action
1	Guide the bottom of the module into the tray at the bottom of the base. 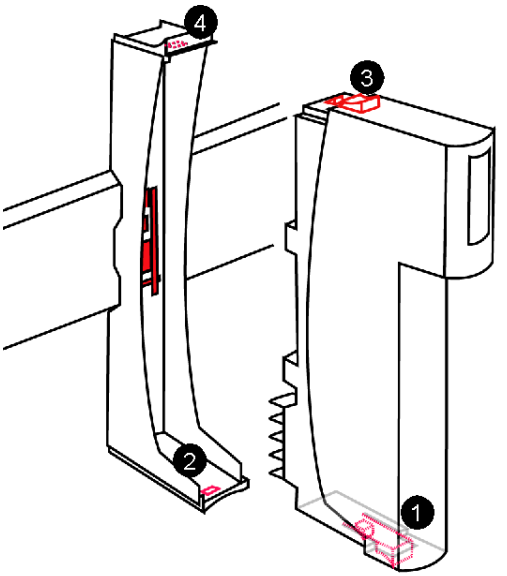 **1** Module to base latch (bottom) **2** Module base latch receptor (bottom) **3** Module latch (top) **4** Module to base latch receptor (top)

Step	Action
2	Push the bottom of the module toward the back of the base until the latch (1) fully engages the bottom of the base (2). A snapping sound is audible when the bottom of the module is engaged.
3	Push the top of the module inward until the latch (3) fully engages the top of the base (4). A snapping sound is audible when the top of the module is engaged. 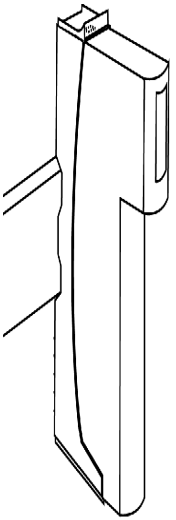
4	Pull outward on the module to confirm that the module is affixed to its base.

How to Remove a Module from its Base

Only remove a module from its base when power to the island is disconnected.

NOTE:

- If you remove an I/O module from the island, any connected sensor or actuator field instruments will no longer work.
- If you remove a module configured as a mandatory module, island operations stop.

To remove a module from its base:

Step	Action
1	Remove any wiring connectors from the module.
2	Using both hands, release the module from the base by depressing the two module to base latches. Latches are located on both the top and on the bottom of the module. 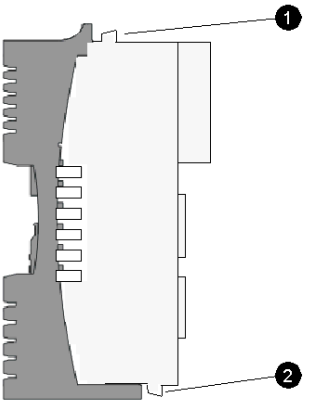 **1** Module to base latch (top) **2** Module to base latch (bottom)
3	With a rocking motion, slowly pull the module evenly out of the base.

Installing Extension Segments to the Island Bus

How to Build an Extension Segment

Build a HART multiplexer extension segment the same way you would build the primary segment, with one exception. Place a beginning of segment (BOS) module in the first position, instead of a NIM.

The BOS module mounts in a special size 2 base, the STB XBA 2300. A BOS delivers logic power across the extension island backplane. Like the NIM, connect a BOS module to an external 24 Vdc power supply.

The rest of the modules are assembled the same as in a primary segment. The second module is a PDM followed by other STB modules.

The last device in the segment can be:

- an STB XMP 1100 termination plate, if placed at the end of the island bus
- an STB XBE 1100 EOS module, if the island bus includes one or more additional segments

An example of a primary segment with extension segment:

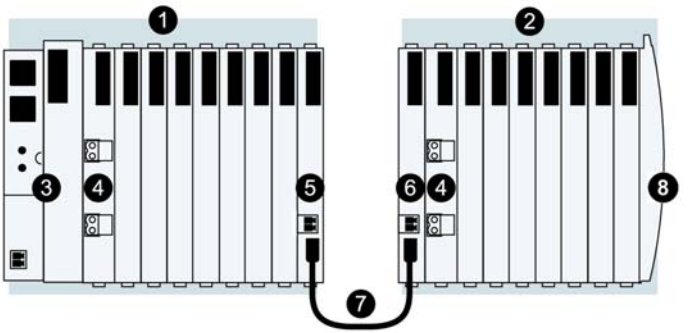

1 Primary island segment
2 Extension segment
3 Network interface module (NIM)
4 Power distribution module (PDM)
5 STB XBE 1100 EOS module
6 STB XBE 1300 BOS module
7 STB XCA 100x extension cable
8 Island bus termination plate

Length of the Island Bus

The maximum length of an island bus (the maximum distance between the NIM and the last device on the island) is 15 m (49.2 ft). This length includes the extension cables between segments, extension cables between preferred modules, and the space consumed by the devices themselves.

EOS/BOS Paired Modules

You can use an EOS module to connect to either:

- a BOS module in the first position of an extension segment
- a preferred module

Refer to the *Advantys STB System Planning and Installation Guide* for instructions on how to connect a primary segment to a preferred module.

When joining island bus segments together, only paired EOS/BOS modules work with one another. Use the STB XBE 1100 EOS module and the STB XBE 1300 BOS module when extending HART multiplexer island segments

Connectors

The STB XBE 1300 BOS module can accept 24V-DC voltage from a 24V-DC power supply connected to its 2-pin power connector. This module can then pass power to the modules on its segment.

Both of the following connectors, which are included with the EOS and BOS modules as part of the kit, can connect to the modules 2-pin connector:

- a *screw type* power connector, available in a kit of 10 (model STB XTS 1120)
- a *spring clamp* power connector, available in a kit of 10 (model STB XTS 2120)

Island Bus Extension Cables

The STB XCA 100*x* island bus extension cable connects two STB island segments:

- One cable end plugs into the island bus communications output port on the front panel of the EOS module (at the end of a segment)
- The other end plugs into the island bus communications input port on the front panel of the BOS (at the beginning of the next segment).

Bus extension cables are available in five lengths:

Model	Cable Length
STB XCA 1001	0.3 m (1 ft)
STB XCA 1002	1.0 m (3.3 ft)
STB XCA 1003	4.5 m (14.8 ft)
STB XCA 1004	10.0 m (32.8 ft)
STB XCA 1006	14.0 m (45.9 ft)

Each cable has IEEE 1394-style connectors on each end. The cable does not transmit the 5-Vdc logic signal to the next segment.

How to Extend the Island Bus

Use the following procedure to extend the island bus from one end of segment (EOS) module to the next beginning of segment (BOS) module:

1	Confirm that the STB XBE 1100 EOS module is in the last (right-most) position in the previous segment.
2	Install the matched STB XBE 1300 BOS module (in an STB XBA 2300 base) in the first position in the extension segment.
3	Build the rest of your segment, starting with the appropriate PDM (in an STB XBA 2200 base) next to the BOS module.
4	Use an extension cable to connect the EOS module in the previous segment to the matched STB XBE 1300 BOS module in the extension segment.
5	Connect the BOS module to your source power supply.

Grounding the HART Multiplexer

5

Overview

This chapter presents techniques for grounding the HART multiplexer.

What Is in This Chapter?

This chapter contains the following topics:

Galvanic Isolation Requirements for Power Supplies on the Island Bus

Isolation Requirements

Verify that the power sources for the NIM and any other auxiliary power supply or BOS modules are galvanically isolated. Galvanic isolation is not provided by the NIM, BOS or auxiliary power supply modules.

External Power Supply Requirement

Use only SELV-rated external 24 Vdc power supplies to provide power to the island bus. Verify that the input side is galvanically isolated from the output side.

This SELV requirement applies to 24 Vdc power supplies supporting both logic power and field power.

The power components are not galvanically isolated. They are for use only in systems designed to provide SELV isolation between the supply inputs or outputs and the load devices or system power bus. Above 130 Vac, the relay module defeats the double insulation provided by a SELV-rated power supply.

⚠ CAUTION

IMPROPER GALVANIC ISOLATION

- Use SELV-rated supplies to provide 24 Vdc source power to the NIM and any BOS or auxiliary power supply modules in your system.
- If you are using a relay module with a contact voltage above 130 Vac, do not use a common external 24 Vdc power supply for the PDM supporting that module and the logic power in the NIM, auxiliary power supplies, or BOS modules.

Failure to follow these instructions can result in injury or equipment damage.

Voltage Cut-out Switching

Advantage of the Power Distribution Method

One of the key features of an STB island featuring a standard NIM is the separate distribution of field power to input and output modules. The STB PDT 3100 standard PDM distributes field power to island modules via a sensor bus. It independently distributes field power to the output modules over an actuator bus.

You can test your application program with live inputs while the outputs are disabled. To do this place a relay or switch installed between the source power supply and the actuator bus connection on the standard PDM,

Here is an example of this relay or switch setup:

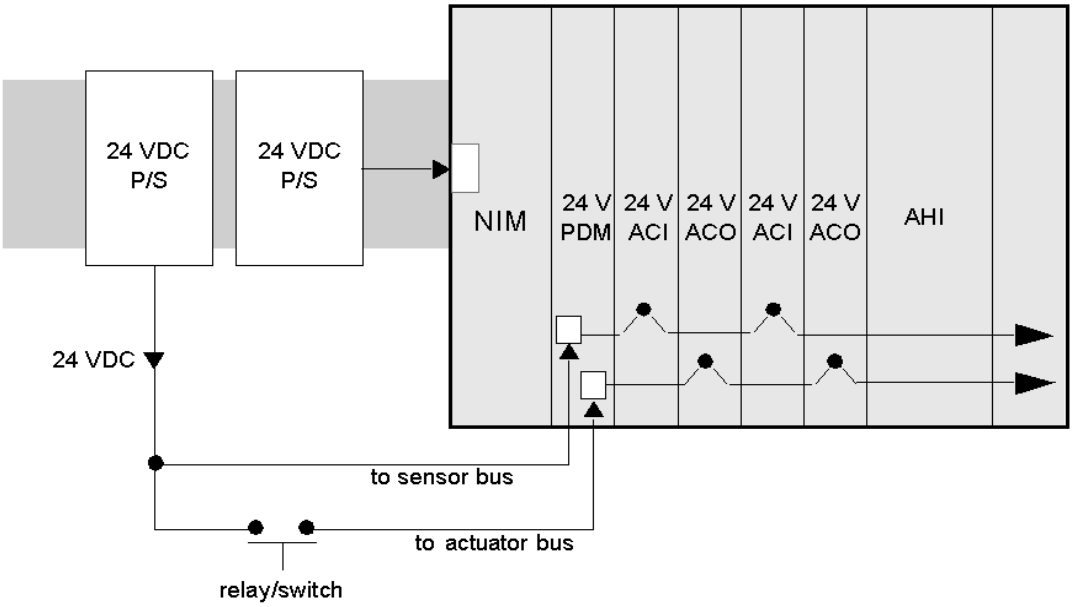

Recommended Relays

Schneider Electric recommends its Preventa line of relays. For a complete selection, contact your Schneider representative and ask for catalog MKTED208051EN-US-2011-SU.

Creating a Protective Ground Connection

PE Contact for the Island

In addition to distributing sensor and actuator power to the I/O modules, the PDM can provide protective ground (PE) to the multiplexer. On the bottom of each STB XBA 2200 PDM base is a captive screw in a plastic block. Use the captive screw, on every PDM base in the multiplexer, to make a PE contact with the island bus.

How to Make a PE Contact

To create a PE contact:

Step	Action
1	Bring a PE connection to the HART multiplexer island using a heavy-duty cross-sectional wire, usually a copper braided cable that is 6 mm^2 or larger.
2	Connect the protective ground conductor to the bottom of the PDM base, using the PE captive screw.
3	Tie the wire to a single grounding point.

NOTE: Local electrical codes take precedence over our PE wiring recommendations.

Making Multiple PE Connections

If the multiplexer island includes more than one PDM, distribute PE by connecting a protective ground conductor to each PDM base *(see page 85)*.

This illustration shows separate PE connections tied to PE protective ground points:

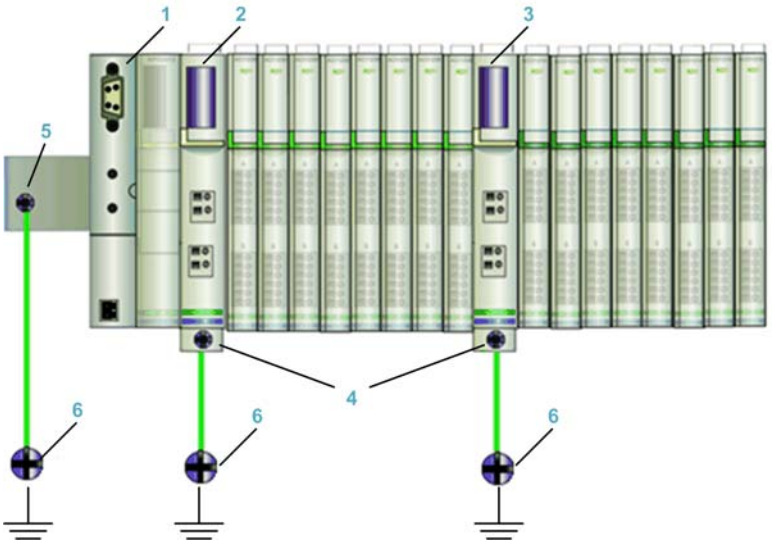

1 the NIM
2 a PDM
3 another PDM
4 captive screws for the PE connections
5 FE connection on the DIN rail
6 Protective ground points

Creating a Functional Ground Connection

Functional Ground (FE) on the DIN Rail

The DIN rail for your STB island is the functional ground (FE) plane for your system. EMI and RFI are suppressed at the DIN rail. The contacts—on the back of both the NIM and the module bases—establish the connection between the functional ground and your island.

Rail Mounting Tips

Create the FE connection by mounting the NIM and the module bases on the DIN rail.

⚠ CAUTION

UNINTENDED EQUIPMENT OPERATION

Do not slide the NIM along the DIN rail. Sliding the NIM can crush the functional ground (FE) contacts on the back of the NIM. Crushed FE contacts can prevent the creation of the FE connection.

Failure to follow these instructions can result in injury or equipment damage.

When performing this task, consider the following tips:

- Do not slide the NIM and the module bases along the DIN rail when installing them. Sliding them along the DIN rail can crush the FE contacts on the back of the NIM and bases. Crushed FE contacts can prevent the creation of the FE connection.
- If you are using 7.5 mm (0.30 in) DIN rail, use flat-head threaded mounting hardware. Countersink the mounting hardware so that the head does not protrude more than 1 mm (0.04 in) above the DIN rail.

NOTE: If the top of the mounting hardware protrudes 1 mm or more above the DIN rail, the base units may not be able to make proper contact with the DIN rail and create an FE connection.

- A 7.5 mm DIN rail can support vibration conditions up to 3 g. For high vibration environments (up to 5 g), use 15 mm (0.59 in) DIN rail and fasten the rail to the mounting surface along areas where the island modules are mounted. Confirm that the screw heads on 15 mm rail are sufficiently recessed so that they do not interfere with the base-to-rail FE contacts.

Using EMC Kits

Overview

EMC kits reduce electromagnetic and radio interference by grounding the shielded cables entering your island modules at close proximity.

The STB XSP 3000 kit comes with a 1 m (39.37 in) grounding bar that can be cut to needed lengths.

Reasons to use the EMC kits on the HART multiplexer island include:

- to make STB analog I/O modules CE compliant
- to enable the use of shielded cables that help protect analog signals from interference from RFI/EMI

The following illustration depicts an STB island segment with an EMC kit making the analog I/O modules CE compliant.

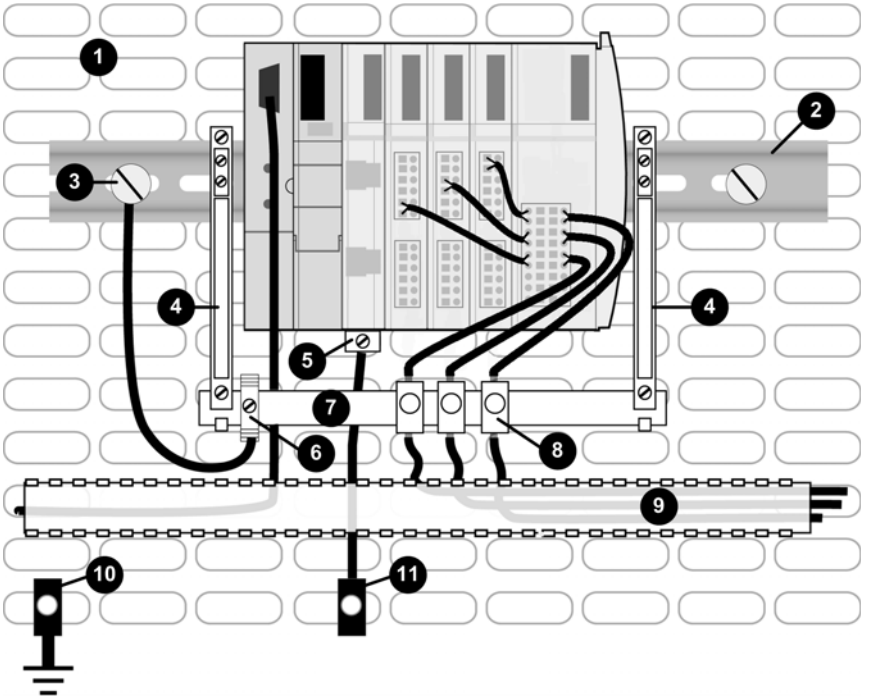

1 metal mounting, grounded surface
2 the DIN rail attached to metal mounting surface
3 Functional ground (FE) grounding point
4 EMC side brackets
5 PDM PE screw
6 EMC FE clamp
7 FE grounding bar from an STB XSP 3000 EMC kit, used as a FE point for shielded cables and as a cable stabilizer
8 EMC cable clamp
9 cable channel
10 6 mm^2 braided cable to plant protective ground
11 Protective ground (PE) grounding point (made as close as possible to the I/O)

The Kits

Schneider Electric offers 3 kits you can use to provide functional ground to your shielded cable. An initial setup consists of an STB XSP 3000 kit and at least one of the cable clamp kits (STB XSP 3010 or STB XSP 3020). STB XSP 3010 kit comes with ten cable clamps for 1.5 mm to 6.5 mm (0.059 to 0.256 in) size cable.
STB XSP 3020 kit comes with ten cable clamps for 5 mm to 11 m (0.19 in to 36.09 ft) size cables.

Kit	Comes with...
STB XSP 3000	two side brackets, one 1 m grounding bar and one FE grounding clamp 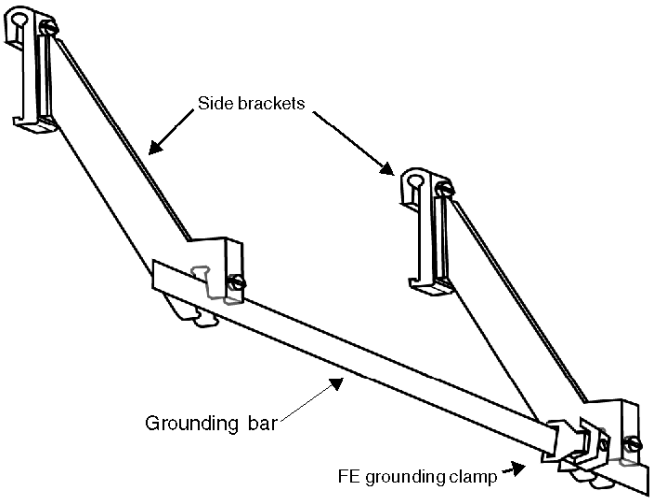
STB XSP 3010	10 small cable clamps for 1.5mm to 6.5mm (0.059 to 0.256 in) cable 

Kit	Comes with...
STB XSP 3020	10 medium cable clamps for 5mm to 11mm (0.19 in to 36.09 ft) cable 

STB XSP 3000 Assembly

Use the following procedure to assemble an STB XSP 3000 kit.

Step	Action
1	Open kit STB XSP 3000 and confirm you have the two side brackets, one grounding bar and one FE grounding clamp.
2	Assemble an STB island segment. 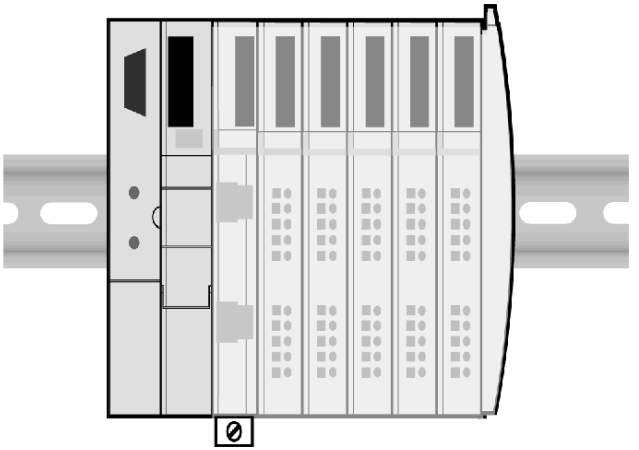

Step	Action
3	Loosen the bracket lockdown screws on each side bracket. Attach the side brackets to the DIN rail on both ends of your assembled STB island segment. They gently snap into place. 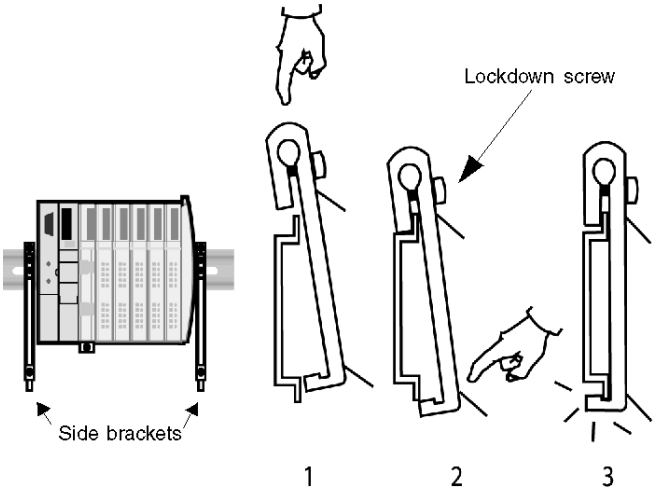
4	Push the side brackets toward both ends of your segment so that they are snug against its walls, and tighten the lockdown screws. 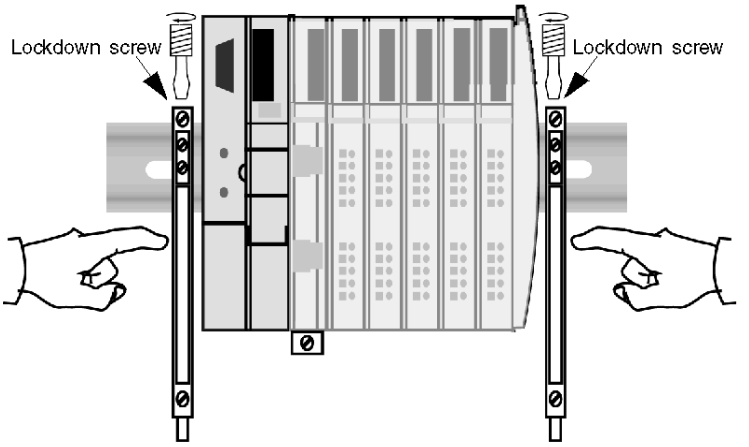

Step	Action
5	Determine the grounding bar length by measuring the distance between the outsides of the side bracket/segment assembly and add 1 cm (0.39 in). You can estimate a different bar length to meet your particular needs. Cut the bar to length. 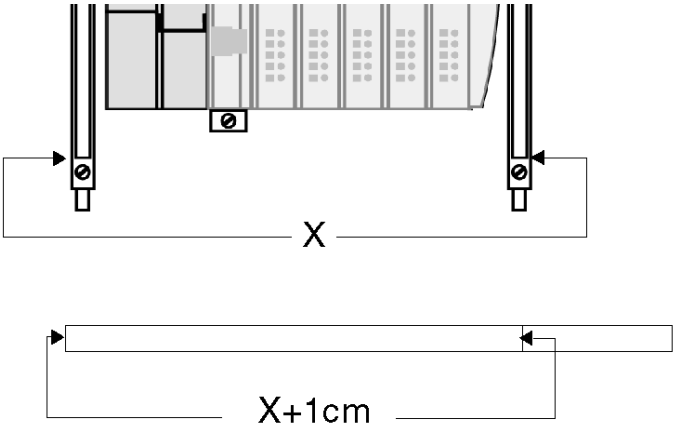 The grounding bar is originally 1 M (9.37 in) long x 18 mm (0.71 in) wide x 3 mm (0.12 in) thick. It is made of tinned copper. Contact a supplier to order extra grounding bars.
6	With the bar cut to length, slide the FE grounding clamp onto the grounding bar. Tighten the lockdown screw on top of the clamp. 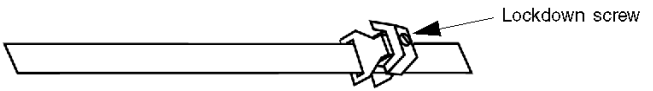
7	Attach the grounding bar to the side brackets and tighten the lockdown screws on the side brackets. 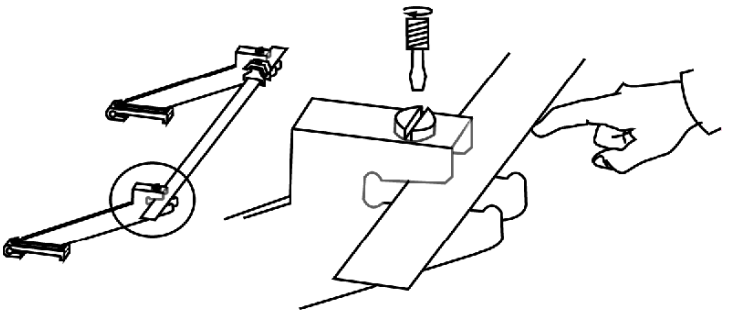

Step	Action
8	Attach the clamp to your supplied functional ground using flat braided grounding cable.

Clamp and Cable Assembly

Use the grounding clamps to attach the shielding of the stripped cable to the FE grounding bar.

Step	Action
1	Position the grounding clamp in front of the module to which you intend to fasten the wiring. Pull back the spring loaded lock down bolt on the clamp. Slip the clamp onto the grounding bar, then release the lockdown bolt. 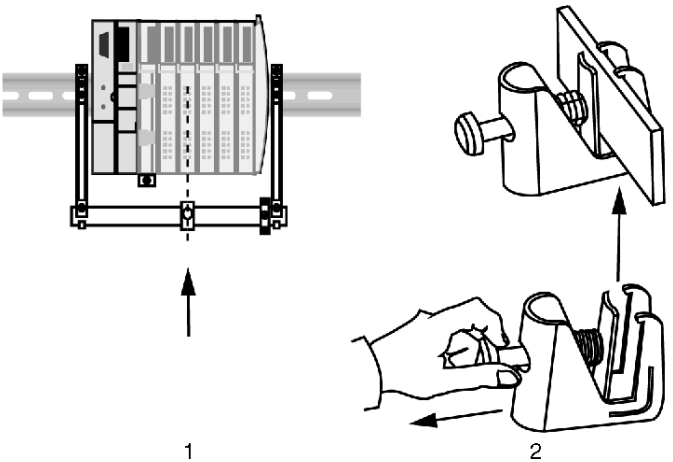

Step	Action
2	Strip 2.5 cm (0.98 in) of insulation off your cable to expose the braided shield. (Confirm the cable on either side of the stripped area is long enough to reach the I/O and field instruments). Pull back on the spring loaded lockdown bolt and slip the cable into the clamp. Release the lockdown bolt. 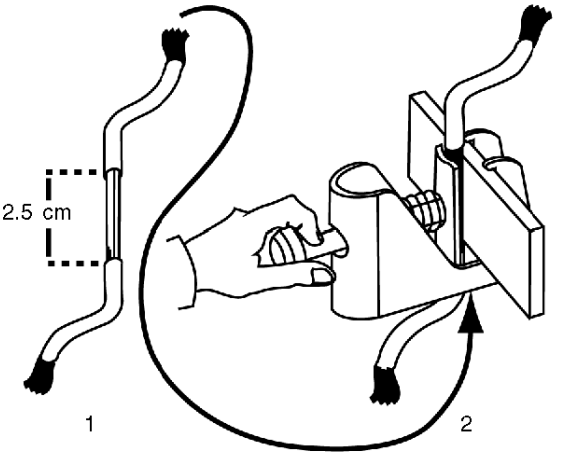 Alternatively, you can clamp your cable to the grounding bar while you attach the cable clamp to the bar.
3	Connect your cable to its I/O and devices.

Assigning an IP Address to the HART Multiplexer

6

Overview

Now that you have built the multiplexer, you need to give it an IP address to be able to communicate with it. This chapter describes several different ways to do this.

What Is in This Chapter?

This chapter contains the following topics:

Assigning an IP Address to the HART Multiplexer

Planning your Ethernet Network

Before you assign an IP address to your multiplexer, it is helpful to first develop a plan for how you will assign an IP address to each device. Such a plan should identify:

- the network prefix of the IP address
- the (optional) use of subnet masks to organize your network into logically distinct subdivisions
- the unique IP address to be assigned to each addressable device

Assignment Methods

The HART multiplexer island communicates to a PLC and to asset management software (resident on a connected PC) over Ethernet. To prepare the multiplexer for Ethernet communications, assign IP parameter settings to the HART enabled Ethernet NIM.

You can set the IP address of the multiplexer island's NIM in several different ways, including the use of:

- the rotary switches on the front of the NIM
- the NIM embedded web pages
- Advantys configuration software connected to the NIM via Ethernet or a serial cable

For information on using the NIM embedded web pages, refer to the documentation that comes with your HART enabled Ethernet NIM, for example the STB NIP 2311.

Rotary Switches

Use the rotary switches on the front of the HART enabled Ethernet NIM to specify how the NIM obtains its IP address settings:

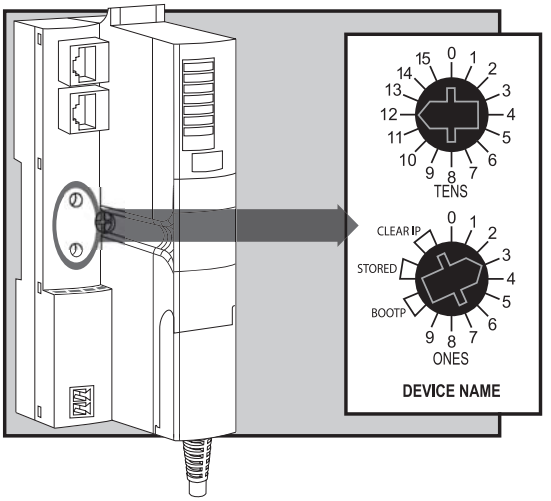

IP Parameter Assignment Sources

Before assigning an IP address, use the rotary switches to clear the NIM stored IP parameters. After setting the lower switch to either CLEAR IP setting, cycle power to the NIM to clear the previous IP address.

You can assign a new IP address using the following rotary switch settings:

- **DHCP server:**
  Set the upper and lower switches to numeric values—from 00 to 159—to create a device name. Do this by using both switches, as follows:
  - On the upper switch (tens digit), the available settings are 0...15.
  - On the lower switch (ones digit), the available settings are 0...9.

  The device name is the three-digit concatenation of the module name, the upper switch value, and the lower switch value. For example, for an STB NIP 2311 NIM:
  - an upper switch setting of 12 and a lower switch setting of 3 creates a device name of *STBNIP2311_123*, or
  - an upper switch setting of 1 and a lower switch setting of 3 creates a device name of *STBNIP2311_013*

NOTE: You also need to separately configure a DHCP server to assign the desired IP address to the NIM based on this device name. For example, you can use the DHCP server that is included in your Schneider Electric PLC Ethernet communication module.

- **BootP server:**
  For a BootP-served IP address, select either of the two **BOOTP** positions on the bottom switch. (The setting of the top switch is ignored.)

NOTE: Separately configure a BootP server to assign the desired IP address to the NIM based on the NIM MAC ID. For example, you can use the BootP server that is included in your Schneider Electric PLC Ethernet communication module.

- **Static IP address settings:**
  Set the lower switch to one of its two **STORED** positions. (The setting of the upper switch is ignored.) Then, use either the Advantys configuration software or the HART enabled Ethernet NIM embedded web pages to input IP address settings. Any assignment takes place on next power cycle.
- The two CLEAR IP settings clear the NIM stored IP parameters, leaving the island without an IP address.

NOTE: After you use the rotary switches to specify the IP addressing source, cycle power to the NIM to configure the IP address.

If the NIM does not receive its IP address setting via the selected method, it assigns a default IP address based on its MAC address *(see page 98)*. The MAC address for a NIM is displayed above the Ethernet ports on the front of the module.

IP Address Assignment Flowchart

The NIM performs the following checks to determine the IP address:

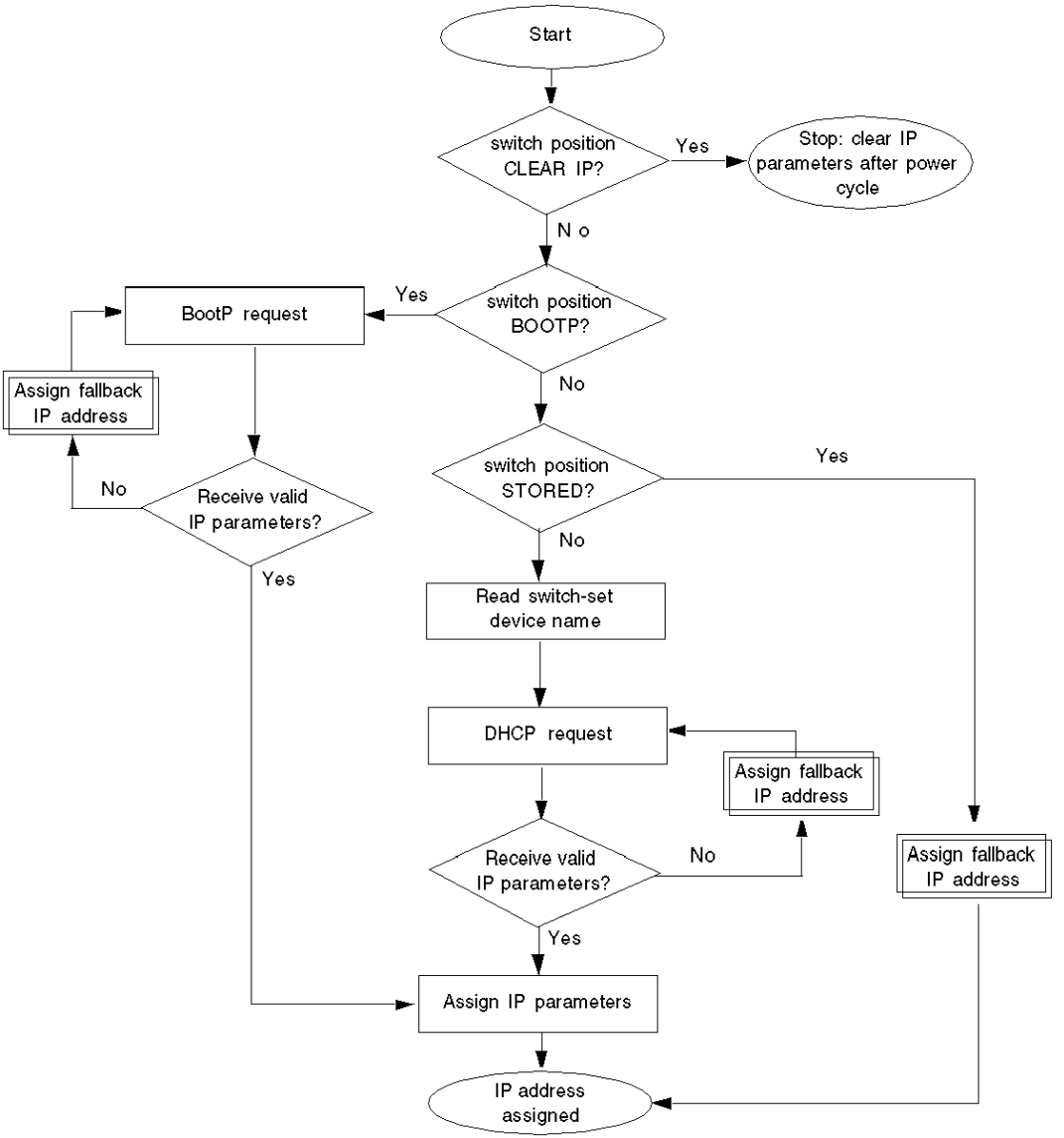
Start
switch position CLEAR IP?
Yes
Stop: clear IP parameters after power cycle
N o
switch position BOOTP?
Yes
BootP request
Assign fallback IP address
No
Receive valid IP parameters?
No
Yes
switch position STORED?
Yes
No
Read switch-set device name
DHCP request
Assign fallback IP address
Receive valid IP parameters?
No
Yes
Assign fallback IP address
Assign IP parameters
IP address assigned

Determining the HART Multiplexer Default IP Address

Deriving an IP Address from a MAC Address

The STB NIP 2311 NIM assigns itself a default IP address—derived from its MAC address—when it does not receive an IP address by the method specified by the rotary switches. For example, a default IP address is assigned if:

- the bottom (ONES) switch is set to CLEAR IP
- the top (TENS) and bottom (ONES) switches are set to numerical values, but no DHCP server assigns an IP address to the NIM
- the bottom (ONES) switch is set to BootP, but no BootP server assigns an IP address to the NIM
- the bottom (ONES) switch is set to STORED, but no user-defined IP address has been input using either the Advantys configuration software or the web pages. This situation occurs, for example, when a new NIM is being used for the first time

The 32-bit default IP address of the NIM is derived from the last 2 octets of its 48-bit MAC address. The default IP address observes the format 10.10.*x*.*y*, where:

- 10.10. are constants
- *x*.*y*. are the decimal values of the last 2 hexadecimal octets of the MAC address.

The following example shows you how to convert the two *x*.*y*. octets from hexadecimal to decimal format and identify the default IP address:

Step	Action	
1	Using a sample MAC address of 00-00-54-10-25-16, ignore the first four pairs (00-00-54-10).	
2	Convert the last two pairs (*25* and *16*) from hexadecimal to decimal format.	**25:** (2 x 16) + 5 = *37*
		16: (1 x 16) + 6 = *22*
3	Observe the specified format (10.10.*x*.*y*.) to assemble the derived default IP address.	The default IP address is: 10.10.37.22

Configuring the HART Multiplexer

7

Overview

Before placing the STB AHI 8321 HART interface module into operation, configure its operating parameters. There are several ways to configure the STB AHI 8321, including:

- Use the HART enabled Ethernet NIM auto-configuration function to apply default parameter settings to all configurable island modules, including the STB AHI 8321 HART interface module.
- Use the Advantys configuration software to customize the default configuration of the STB AHI 8321 HART interface module, and any other island module with configurable settings.
- If you previously saved the STB island configuration settings to a SIM card, you can also apply those saved settings to the island.

What Is in This Chapter?

This chapter contains the following topics:

Auto-Configuring the HART Multiplexer

Factory Default Settings

Every configurable STB module is shipped with a set of predefined parameter settings. When you apply these predefined parameter settings, the HART multiplexer island becomes operational. You can apply the default settings via auto-configuration.

When you auto-configure the HART multiplexer island, the following default parameter settings are applied to each STB AHI 8321 HART interface module in the multiplexer island:

Parameter	Description	Default Setting
CH-Enable	The states—enabled or disabled—of the four channels of the HART interface module.	15 (all channels are enabled)
Channel 1...4 Settings		
● Lower Scan Address	The first address, of a range of addresses, scanned by the HART interface module when looking for a HART instrument on the channel.	0
● Upper Scan Address	The last address, of a range of addresses, scanned by the HART interface module when looking for a HART instrument on the channel.	15
● Number of Preambles	The minimum number or preambles the HART interface module uses to communicate with a HART instrument.	5
● Number of Communication Retries	The number of times the HART interface module will re-send a command after failing to communicate with a HART instrument.	5
● Number of Busy Retries	The number of times the HART interface module will re-send a command after receiving a busy reply from a HART instrument.	2
● Fallback Mode Setting	If the HART instrument on this channel is disconnected, or if there is no HART instrument, this value is assigned to the field instrument variables until a connection to a HART instrument is made.	NaN

NOTE: Your HART multiplexer island can also include the following analog I/O modules:

- STB ACI 0320
- STB ACI 8320
- STB ACO 0120
- STB ACO 0220

Refer to the *Advantys STB Analog I/O Modules Reference Guid*e for a description of analog I/O default parameter settings.

To perform auto-configuration, you can use either:

- the RST button on the front face of the NIM
- the **Online** → **Force Auto-configuration** command in the Advantys configuration software

The simplest way to auto-configure the HART multiplexer is to use the RST button.

NOTE: Auto-configuration overwrites any pre-existing custom configuration with default settings for island modules. If you have previously used Advantys configuration software to apply a custom configuration *(see page 103)* to your HART multiplexer island, do not press the RST button or force auto-configuration.

⚠ CAUTION

UNINTENDED EQUIPMENT OPERATION

Do not press the RST button—or force auto-configuration—for a HART multiplexer island that is operating using an application that was custom configured with Advantys configuration software.

Failure to follow these instructions can result in injury or equipment damage.

The RST Button

The RST button performs a Flash memory overwrite operation. The RST button is located immediately above the CFG port on the NIM, behind the NIM hinged cover:

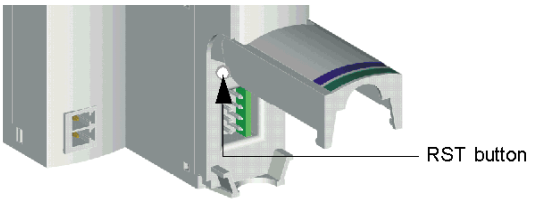

How to Perform Auto-Configuration

To perform auto-configuration, follow these steps:

Step	Action
1	Remove any SIM card *(see page 125)* from the NIM.
2	Using a small screwdriver with a flat blade no wider than 2.5 mm (0.99 in), press the RST button and hold it down for at least 2 seconds. Do not use: ● a sharp object that can damage the RST button, or ● a soft item like a pencil that can break off and jam the RST button

If the HART multiplexer island was previously auto-configured, auto-configuration changes no parameter settings. However, the HART multiplexer island stops updating I/O during the auto-configuration process.

If you previously used Advantys configuration software to edit the island parameters, auto-configuration overwrites your customized settings with the factory default parameters.

Customizing the HART Multiplexer Configuration

Using Advantys Configuration Software

After the HART multiplexer island is powered up and auto-configured, you can use the Advantys configuration software to upload the default island configuration, where you can customize the configuration.

NOTE: You do not need to use the Advantys configuration software to operate your HART multiplexer. Using the RST button, you can apply default settings *(see page 100)* to each module in your island, and continue to operate the multiplexer in its default configuration. However, Schneider Electric recommends that you use Advantys configuration software to configure and monitor your HART multiplexer.

You can use the Advantys configuration software to:

- create, modify, and save the logical description of the physical devices used in a project
- monitor, adjust data values, and debug the project in online mode
- view a graphical display of the selected equipment and a hierarchical display of the island (the **Workspace Browser**)
- enhance performance of specific modules

For information on how to use the Advantys configuration software to configure the configurable modules in your HART multiplexer island, refer to the Advantys configuration software online help. Detailed instruction on how to use Advantys configuration software is beyond the scope of this document.

Customizing the STB AHI 8321 HART Interface Module

To customize the configuration of the HART multiplexer island, including the STB AHI 8321 HART interface module, you need to use the Advantys configuration software. In the Advantys configuration software, with the island unlocked, select a HART interface module in the island and open the **Module Editor**, which presents the following tabs:

- Use the **Parameters** tab to access and edit configurable parameters for the STB AHI 8321 module.
- Use the **I/O Mapping** tab to edit the multiplexer island data process image, by adding and removing STB AHI 8321 module data items.
- Use the **IO Image** tab to view a list of STB AHI 8321 module data process image items for the selected HART interface module.
- Use the **Options** tab to specify that the STB AHI 8321 module is:
  - a mandatory island module
  - not present, but its place preserved in the island process image

Schneider Electric Technical Support

Schneider Electric provides technical support for its products, including the Advantys configuration software. To reach Schneider Electric tech support, visit www.Schneider-Electric.com and click on the image for the Schneider Electric *Customer Care Center* .

Configuring STB AHI 8321 Channel Settings

Configuring HART Interface Module Channel Properties

Use the **Parameters** tab of the **Module Editor** for the STB AHI 8321 module to configure the HART channels. In this tab, you can:

- enable or disable each of the module's four HART channels
- define the range of address the STB AHI 8321 module scans when searching for a HART instrument on each HART channel
- specify the minimum number of preambles the STB AHI 8321 module uses to communicate with a HART instrument

Create the STB AHI 8321 module configuration settings offline, then download them—along with the rest of the multiplexer island settings—to the NIM. The NIM uses these settings to configure the STB AHI 8321 module before placing the island into the run state.

NOTE: You cannot configure values or labels when the island is locked or online. For editable parameters, the valid value range is displayed in the status bar of the **Module Editor**.

The **Parameters** tab:

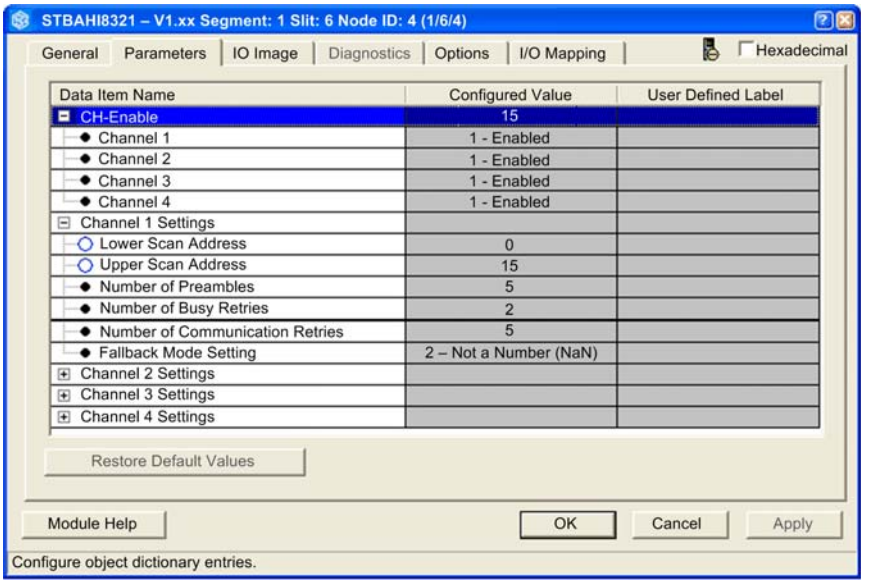

NOTE: Configuration changes entered in this tab take effect only after you use the Advantys Configuration Software to:

1. save your edits by clicking either the **OK** or **Apply** button
2. download the island configuration by using:
   a. the **Online** → **Connect** command to connect to the island
   b. the **Online** → **Download into the Island** command to send the configuration to the island

Configurable Parameters

You can configure the following parameters for the STB AHI 8321 HART interface module:

Parameter Name	Description
CH-Enable	The state of all four of the HART channels. The CH-Enable value equals the sum of the bit value for each channel that is enabled: ● bit 0 (channel 1) has a value of 1, when enabled ● bit 1 (channel 2) has a value of 2, when enabled ● bit 2 (channel 3) has a value of 4, when enabled ● bit 3 (channel 4) has a value of 8, when enabled The default value is 15, indicating all 4 HART channels are enabled. **NOTE:** When CH-Enable appears as a parameter in this tab, it is not mapped to the process image and cannot be controlled by program logic. You can map the CH-Enable parameter to the process image by selecting it in the **I/O Mapping** tab.
● Channel 1...4	Bit 0 (channel 1), bit 1 (channel 2), bit 2 (channel 3), bit 3 (channel 4) of CH-Enable. Sets the status of the selected channel to one of the following settings: ● 0 = disabled ● 1 = enabled (default)
Channel 1...4 Settings	
● Lower Scan Address	Use these two settings to establish the address range the HART interface module searches when looking for a HART instrument on the specified channel. ● minimum value = 0 ● maximum value = 63 Lower Scan Address Default = 0; Upper Scan Address Default = 15. **NOTE:** The value of the Upper Scan Address must be equal to or greater than the value of the Lower Scan Address.
● Upper Scan Address	

Parameter Name	Description
● Number of Preambles	The minimum number of preambles the HART interface module uses to communicate with a HART instrument. If the HART instrument requires: ● more preambles, the HART interface module sends more preambles ● fewer preambles, the HART interface module sends the minimum number configured by this setting Default = 5.
● Number of Communication Retries	The number of times the HART interface module re-sends a command to a non-responsive HART instrument. Valid values = 0, 1, and 2. Default = 5.
● Number of Busy Retries	The number of times the HART interface module re-sends a command after receiving a busy reply from a HART instrument. Valid values = 0, 1, and 2. Default = 2.
● Fallback Mode Setting	If the HART instrument on this channel is disconnected, or if there is no HART instrument, this setting determines the value that is assigned to the primary variable (**PV**) until a connection to a HART instrument is made: ● 0 - Set to 0 ● 1 - Hold Last Value ● 2 - Not a Number (NaN) Default = NaN

Restore Default Values

You can click the **Restore Default Value** button to reset the modified values on this tab to their default values.

Mapping Data items to the HART Multiplexer Island Data Process Image

Editing the HART Multiplexer Data Process Image

You can modify the HART multiplexer island data process image only by using the Advantys configuration software. You can use the **I/O Mapping** tab of the **Module Editor** to perform the following tasks for a selected STB AHI 8321 module:

- Add data items to, or remove data items from, the multiplexer island data process image relating to the selected STB AHI 8321 module
- Configure the CH-Enable parameter for the selected STB AHI 8321 module as either:
  - a static property manually set in the **Parameters** tab of the **Module Editor**, or
  - a dynamic property controlled by program logic
- Restore the default list of input and output data items included in the island data process image by clicking the **Restore Default Values** button
- Display the data type and object ID for each input and output data item

I/O mapping lets you optimize the HART multiplexer island process image on a module-by-module basis. The title bar at the top of the **Module Editor** displays the name of the HART interface module and its exact location on the island bus.

The **I/O Mapping** tab:

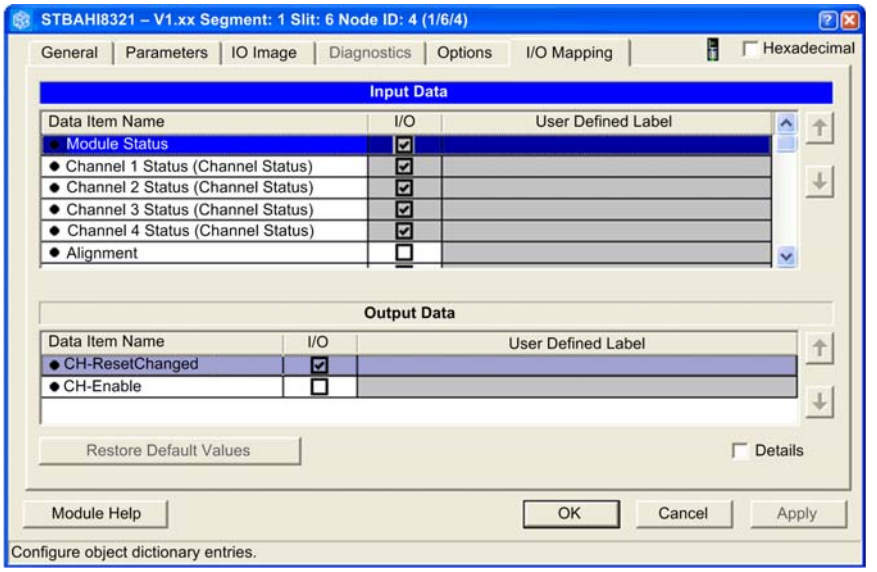

NOTE: Configuration changes entered in this tab take effect only after you use the Advantys configuration software to:

1. save your edits by clicking either the **OK** or **Apply** button
2. download the island configuration by using:
   a. the **Online** → **Connect** command to connect to the island
   b. the **Online** → **Download into the Island** command to send the configuration to the island

Both the **Input Data** and the **Output Data** areas present the following columns:

Column Name	Description
Data Item Name	Displays both mapped and unmapped data items.
I/O	A check mark indicates the data item is mapped to the island data process image. You can manage the quantity of data included in the HART multiplexer data process image by selecting or de-selecting data items in this column. **NOTE:** A gray background in this column indicates the data item is part of the data process image and cannot be deleted.
User Defined Label	Displays the labels associated with each data item. You can edit labels for a single HART interface module in the **I/O Image** tab and the **Parameters** tab of the **Module Editor**. **NOTE:** You can also use the **Island** → **Label Editor...** command to open a **Label Editor** and edit labels for the entire island.

NOTE: Saving an added or deleted data item in this tab simultaneously adds or deletes it in the **IO Image** tab.

If the current setting of any data item is different from its default setting, the ☑ icon is displayed to the left of the **Hexadecimal** check box.

To restore input and output data items to their default mappings, click **Restore Default Values** in offline mode.

Mapping Input Data Items

For information describing individual input data items, refer to the topic STB AHI 8321 Input Items *(see page 114)*.

Mapping Output Data Items

For information describing individual output data items, refer to the topic STB AHI 8321 Output Items *(see page 118)*.

Viewing the IO Image for the STB AHI 8321 HART Interface Module

Viewing Mapped Data Items

Use the **IO Image** tab of the **Module Editor** for the STB AHI 8321 module to:

- view the STB AHI 8321 module data items that are part of the multiplexer island data process image
- add user-defined labels to items in the list

The title bar of the **Module Editor** displays the name of the module and its exact location on the island bus.

The **IO Image** tab:

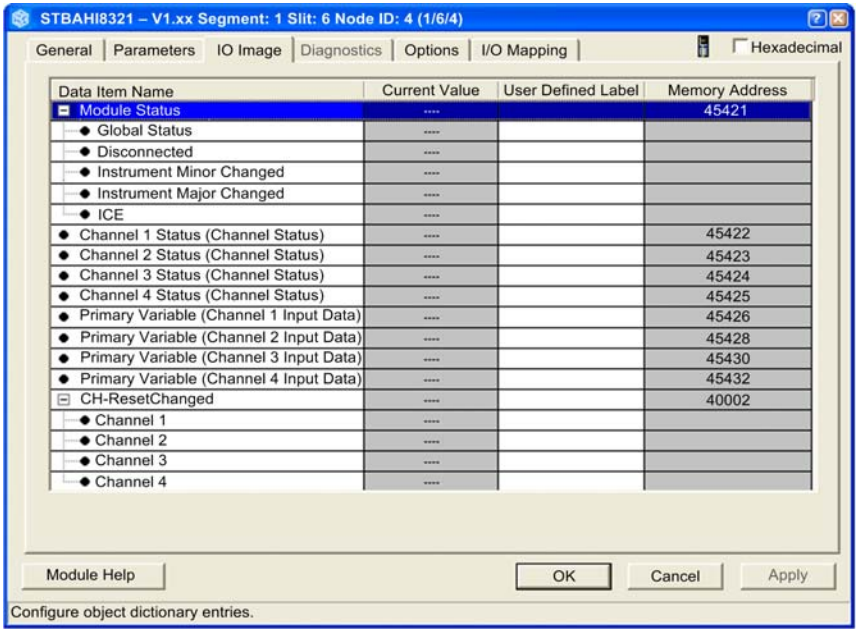

Data Item Name	Current Value	User Defined Label	Memory Address
Module Status	----		45421
Global Status	----		
Disconnected	----		
Instrument Minor Changed	----		
Instrument Major Changed	----		
ICE	----		
Channel 1 Status (Channel Status)	----		45422
Channel 2 Status (Channel Status)	----		45423
Channel 3 Status (Channel Status)	----		45424
Channel 4 Status (Channel Status)	----		45425
Primary Variable (Channel 1 Input Data)	----		45426
Primary Variable (Channel 2 Input Data)	----		45428
Primary Variable (Channel 3 Input Data)	----		45430
Primary Variable (Channel 4 Input Data)	----		45432
CH-ResetChanged	----		40002
Channel 1	----		
Channel 2	----		
Channel 3	----		
Channel 4	----		

The **IO Image** tab presents the following columns:

Column Name	Description
Data Item Name	Displays data items, for the selected STB AHI 8321 module, that have been mapped to the HART multiplexer island data process image. Items that appear in this column are selected in the **I/O Mapping** tab
Current Value	**Current Value:** Displays the current value for each mapped data item. You can toggle the format of the displayed values between decimal (the default) and hexadecimal by selecting or clearing the **Hexadecimal** check box. **NOTE:** The actual values are displayed only when the island is online and in either the operational state or the non-mandatory module mismatch state. For other states, the symbol **---** is displayed.
User Defined Label	Displays the labels associated with each data item. Double-click in the appropriate cell to enter label text. Each label can be up to 24 characters long.
Memory Address	Displays the Modbus register address for parent data items. Values in this column are read-only

Configuring the STB AHI 8321 Module as Mandatory or Not Present

Introduction

Use the **Options** tab of the **Module Editor** to indicate if the STB AHI 8321 HART interface module is:

- a mandatory island module *(see page 113)*
- a module that is not present *(see page 113)* in the island

The **Options** tab of the STB AHI 8321 HART interface module:

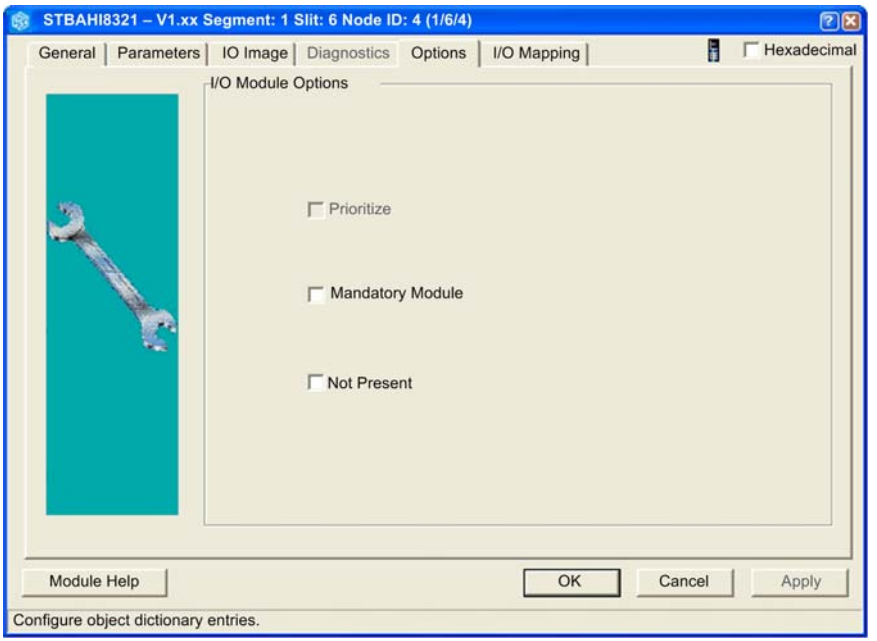

The **Prioritize** parameter is disabled and does not apply to the STB AHI 8321HART interface module.

Mandatory Module

Select the **Mandatory Module** setting to designate the module as mandatory. If a mandatory module stops operating or is removed from the island, the island stops writing to outputs, and island modules go to their fallback states.

The island returns to its operational state after you install at this exact location on the bus:

- the same functional module
- a new module of the same type and major version number

By default, the **Mandatory Module** setting is de-selected.

NOTE: The **Mandatory** check box can be selected or de-selected only when the island is in offline mode.

Not Present

Check this box to mark the module as virtual placeholder.

The virtual placeholder designation lets you physically remove both a module and its base from the island without changing the island process image. In this way, you can physically remove one or more modules without having to edit the PLC program that controls the island.

In the **Module Editor**, modules configured as *Not Present* are marked with crossed red lines.

Data Process Image Items for the STB AHI 8321 HART Interface Module

Input and Output Data Process Image Items

The STB AHI 8321 HART interface module supports the mapping of HART instrument input and output data items to the HART multiplexer island process image.

Input Data Items

The **Input Data** area of the **I/O Mapping** tab of the **Module Editor** lists read-only input items for the STB AHI 8321 HART interface module. These items can be added to the HART multiplexer island data process image, and include:

Data Item	Data Type	Mapped by Default?	Is Default Mapping Editable?	Bytes
Module Status	Word	Yes	No	2
Channel 1...4 Status	Word	Yes	No	2
Alignment	Word	No	Yes	2
Channel 1...4 Hart Instrument Specific Variables:				
Primary Variable (Channel 1...4 Input Data)	Float	Yes	Yes	4
Instrument Status	32 bit unsigned	No	Yes	4
Secondary Variable	Float	No	Yes	4
Current Value	Float	No	Yes	4
Percent Value	Float	No	Yes	4
Update Counter	32 bit unsigned	No	Yes	4

NOTE: You can monitor the status of the mapped input data items, listed above, as follows:

- you can view all of the mapped input data items in the Advantys configuration software **Module Editor** for the selected STB AHI 8321 HART interface module, or
- you can view many of the mapped input data items in the diagnostic web pages for the HART enabled Ethernet NIM

Module Status

The **Module Status** word presents a snapshot of the overall health of the HART interface module and its 4 channels.

Bit Number	Name	Description
0	Global Status	= 1 if the HART interface module has detected one or more of the following conditions: ● one or more HART channels are disconnected (Bit 1 (Disconnected) = 1) ● a HART channel is connected to a field device that is materially different from the device configured for that channel; e.g., a device of different device type or made by a different manufacturer. (Bit 3 (Instrument Changed, Major) = 1) ● an internal communication event—ICE—has occurred (Bit 4 (ICE) = 1)
1	Disconnected	= 1 if any channel is in the disconnected (CH-Disconnected) state
2	Instrument Changed, Minor	=1 if any channel is in the instrument changed, minor *(see page 120)* state
3	Instrument Changed, Major	=1 if any channel is in the instrument changed, major *(see page 120)* state
4...6	—	= 0 (not used)
7	ICE	= 1 on the occurrence of an *internal communication event*
8...15	—	= 0 (not used)

Channel Status

The **Channel Status** words report the status of each of the STB AHI 8321 HART interface module's four channels. **Channel Status** values are as follows:

Value	Name	Description
0	CH-Disabled	The channel is disabled.
1	CH-Connecting	The STB AHI 8321 is searching for, and attempting to connect with, a HART instrument on the channel.
2	CH-Connected	The channel is connected to a HART instrument.
3	CH-MinorDiff	One or more minor differences *(see page 120)* exist between the connected HART instrument and the instrument description in the multiplexer island configuration.
4	CH-MajorDiff	One or more major differences *(see page 120)* exist between the connected HART instrument and the instrument description in the multiplexer island configuration.
5	CH-Disconnected	This state indicates either: ● The STB AHI 8321 discovered no HART instrument on the channel, after performing two scans of the specified address range. ● The STB AHI 8321 discovered a HART instrument on the channel, but the connection was lost. The STB AHI 8321 continues to search for a HART instrument on this channel.
6...255	—	(not used)

Alignment

Use this parameter to place data objects on a 32-bit boundary, for architectures—such as the Schneider Electric M340 platform—that require input data to be read or written in 32-bit (2 register) increments. Mapping this parameter to the input data process image adds a 2 byte (1 register) buffer to the I/O image immediately in front of the input data.

You can use the **I/O Image** tab of the **Module Editor** in the Advantys configuration software to determine whether input data for an STB AHI 8321 HART interface module resides on a 32-bit boundary.

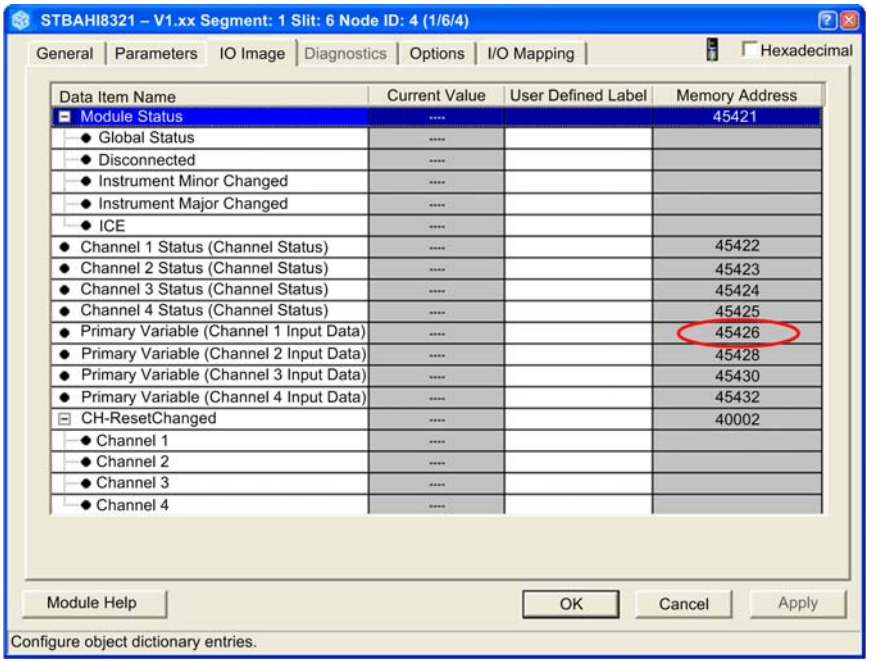

Data Item Name	Current Value	User Defined Label	Memory Address
Module Status	----		45421
Global Status	----		
Disconnected	----		
Instrument Minor Changed	----		
Instrument Major Changed	----		
ICE	----		
Channel 1 Status (Channel Status)	----		45422
Channel 2 Status (Channel Status)	----		45423
Channel 3 Status (Channel Status)	----		45424
Channel 4 Status (Channel Status)	----		45425
Primary Variable (Channel 1 Input Data)	----		45426
Primary Variable (Channel 2 Input Data)	----		45428
Primary Variable (Channel 3 Input Data)	----		45430
Primary Variable (Channel 4 Input Data)	----		45432
CH-ResetChanged	----		40002
Channel 1	----		
Channel 2	----		
Channel 3	----		
Channel 4	----		

In the above example, the **Alignment** parameter is not enabled. Input data begins at memory address 45426. Because 45426 is an even number, input data begins at a 32-bit boundary. In this case, it is not necessary to enable the **Alignment** parameter.

Alternatively, if input data instead began at an odd number memory address—for example, 42425—input data would not begin at a 32-bit boundary. In this case, enabling the **Alignment** parameter adds a 2 byte buffer to the I/O image, and places the input data object on a 32-bit boundary.

Channel 1...4 HART Instrument Specific Data Items

The STB AHI 8321 can also add to the multiplexer island process image the following data items for each HART channel:

- Primary Variable (PV): manufacturer defined
- Instrument Status: reports one of the following conditions:
  - Non-operational Instrument: a detected error rendered the instrument non-operational
  - Configuration Changed: an operation occurred that changed the instrument configuration
  - Cold Start: the instrument was reset, or power was cycled off then on
  - More Status Available: additional instrument information is available via HART command 48 (Read Additional Status Information)
  - Loop Current Fixed: current on the HART channel is being held at a fixed value, and is not responding to process variations
  - Loop Current Saturated: current on the HART channel has reached its upper or lower limit, and cannot increase or decrease further
  - Non-primary Variable Out of Limits: the value of an instrument variable, other than the Primary Variable (PV), has travelled beyond its operating limits
  - Primary Variable Out of Limits: the value of the instrument Primary Variable (PV) has travelled beyond its operating limits
- Secondary Variable (SV): manufacturer defined
- Current Value: the actual reading of loop current, from 4...20 mA
- Percent Value: the actual reading of loop current, expressed as a percent of the 16 mA range
- Update Counter: a counter that is incremented each time the data process image is updated

Check the documentation for your specific HART instrument to determine if it offers the above data items.

Output Data Items

The **Output Data** area of the **I/O Mapping** tab of the **Module Editor** lists output items for the STB AHI 8321 HART interface module. These items can be added to the HART multiplexer island data process image. These items include:

Data Item	Data Type	Mapped by Default?	Is Default Mapping Editable?
CH-ResetChanged	Byte	Yes	No
CH-Enable	Byte	No	Yes

NOTE: When an output data item in the **I/O Mapping** tab is:

- *Selected*: program logic dynamically controls the item during run-time.
- *De-selected*: the data item is added to the list of configurable data items in the **Properties** tab, where you can set a static value to be assigned to the item at start-up.

CH-ResetChanged

Logic in the PLC application uses the **CH-ResetChanged** data item to accept a HART instrument that has been detected to have a **Module Status** identity of either **Instrument Changed, Minor** or **Instrument Changed, Major**. When PLC logic causes a bit in this register to transition from 0 to 1, the HART instrument detected on that channel is accepted as the current instrument.

The **CH-ResetChanged** word includes the following bits:

Bit Number	Name	Description
0	CH-1 Reset	0 to 1 transition clears changed instrument indicators, and accepts the detected HART instrument on the channel.
1	CH-2 Reset	
2	CH-3 Reset	
3	CH-4 Reset	
4...15	—	(not used)

CH-Enable

The **CH-Enable** output item reports and controls the state—enabled or disabled—of each of the four channels of the HART interface module. Default value = 15 (dec), indicating the 4 HART channels are enabled

The bits in the **CH-Enable** word:

Bit Number	Name	Description
0	CH-1 Enable	• 0 = disabled • 1 = enabled (default)
1	CH-2 Enable	
2	CH-3 Enable	
3	CH-4 Enable	
4...15	—	= 0

Major and Minor Differences

When the STB AHI 8321 module establishes connection with a HART instrument, it checks whether the present connection is the first connection made on the channel.

If there was a previous connection, the module checks whether the connected instrument matches the previously connected instrument. It does this by comparing the instrument-defining elements in the presently connected instrument with those recorded for the previously connected instrument.

The module gathers data from the HART instrument in the same manner whether the instrument is connected, connected with major differences, or connected with minor differences.

NOTE:

- To see which instrument-defining element has changed, you can use HART command 0 (Read Unique Identifier) to examine the definition of the presently connected HART field device.
- To accept a connected HART field instrument that has either major differences or minor differences, set the value of the **CH-ResetChanged** parameter to 1 for the appropriate channel.

Major Differences:

The following differences in the definition of a HART field instrument are described as major:

- instrument type: e.g., a NIM (protocol gateway) instead of a sensor
- instrument manufacturer
- manufacturer-specific instrument model number
- instrument firmware revision number
- the collection of instrument supported Universal and Common Practice HART commands

Minor Differences:

The following differences in the definition of a HART field instrument are described as minor:

- instrument serial number
- instrument supported HART protocol version: e.g., V. 7 instead of V.5
- instrument electronics components

Using the STB XMP 4440 Optional Removable Memory Card to Configure the Island

When to Use a SIM Card

You can use a removable memory card in the following scenarios. Each scenario assumes that a removable memory card—with a valid island configuration—is already installed in the NIM.

- Initial island bus configuration
- Replacement of the current configuration data in Flash memory to:
  - apply custom configuration data to your island
  - temporarily implement an alternative configuration; for example, to replace an island configuration used daily with one used to fulfill a special order
- Copying configuration data from one NIM to another NIM with the same part number. For example, copying the configuration form a non-operational NIM to its replacement.
- Configuring multiple islands with the same configuration data

NOTE: The use of the Advantys configuration software is required when writing configuration data to the removable memory card in the first instance.

Applying Ethernet Address Settings Using a SIM Card

The removable memory card option in the STB NIP 2311 has an additional feature that allows you to store Ethernet network configuration parameters. When properly configured, these parameters are written to flash along with the island parameters on power up. To apply Ethernet addressing parameters:

1. Use the Advantys configuration software to configure the network communication parameters.
2. Configure the communication parameters only while the island is offline. The configured settings take effect after a power cycle of the STB NIP 2311.
3. Select the **Enable Editing** check box in the **Ethernet Parameters** tab to enable parameter entries. Verify that this check box remains selected when the configuration is downloaded to the island. If it is de-selected before configuration download to the island, these parameters are not used upon power up.
4. Set the **ONES** rotary switch position to **STORED** to use the configured communication parameters.

NOTE: Using the same memory card to replicate multiple islands with the same stored IP configuration can lead to duplicate IP addresses. In this case, obtain a unique IP address for each island NIM and separately configure the IP address *(see page 94)* for each island.

Initial Configuration and Reconfiguration Scenarios

Use the following procedure to set up an island bus with configuration data that was previously saved to a removable memory card. You can use this procedure to configure a new island or to overwrite an existing configuration.

NOTE: The use of this procedure overwrites your existing configuration data.

Step	Action	Result
1	Install the removable memory card in its drawer in the NIM *(see page 123)*.	
2	Power up the new island bus.	The configuration data on the card is checked. If the data is valid, it is written to the NIM and overwrites the existing configuration. The system restarts automatically, and the island is configured with this data. If the configuration data is invalid, it is not used and the island bus stops.

Configuring Multiple Islands with the Same Data

You can use a removable memory card to make a copy of your configuration data; then use the card to configure multiple island buses. This capability is advantageous in a distributed manufacturing environment or for an OEM (original equipment manufacturer).

NOTE: The islands can be either new or previously configured, provided that:

- the island NIMs are the same type, with the same part number, and
- the physical island configurations (i.e., the sequence and identity of island modules) are the same

Applying a Stored Configuration to the HART Multiplexer

Using a Removable Memory Card

The STB XMP 4440 removable memory card (SIM card) lets you store, distribute, and reuse custom island bus configurations. If a memory card with a valid configuration is in the NIM on start-up, the configuration on the card overwrites the configuration in Flash memory. In this way, you can use a SIM card to replace the existing configuration in the NIM with the configuration that is stored on the SIM card. This process can be very useful if you need to replace your NIM or you want to quickly replicate island configurations.

The removable memory card is an optional STB feature.

Caring for a SIM Card

SIM card performance can be degraded by dirt or grease on its circuitry. Contamination of, or damage to, the SIM card can create an invalid configuration.

⚠ CAUTION

LOSS OF CONFIGURATION: MEMORY CARD DAMAGE OR CONTAMINATION

- Use care when handling the card.
- Inspect for contamination, physical damage, and scratches before installing the card in the NIM drawer.
- If the card does get dirty, clean it with a soft dry cloth.

Failure to follow these instructions can result in injury or equipment damage.

Installing the SIM Card

Use the following procedure to install the memory card:

Step	Action
1	Punch out the removable memory card from the plastic card on which it is shipped. 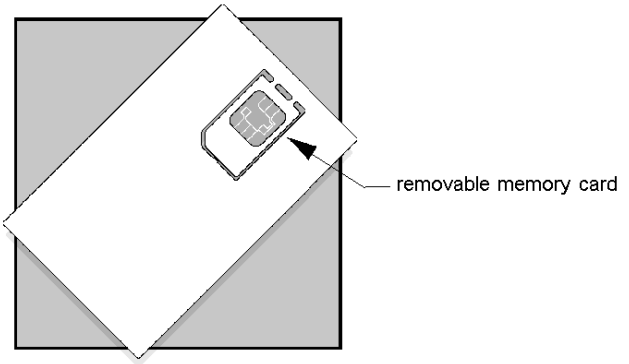 Confirm that the edges of the card are smooth after you punch it out.
2	Open the card drawer on the front of the NIM. To more easily work with the SIM card, you can pull the drawer out from the NIM housing.
3	Align the chamfered edge (the 45° corner) of the removable memory card with the one in the mounting slot in the card drawer. Hold the card so that the chamfer is in the upper left corner. 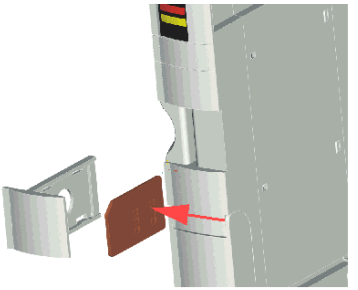
4	Seat the card in the mounting slot, applying slight pressure to the card until it snaps into place. Verify that the back edge of the card is flush with the back of the drawer.
5	Close the drawer.

Removing the Card

Use the following procedure to remove the memory card from the NIM. Avoid touching the circuitry on the card.

Step	Action
1	Open the card drawer. 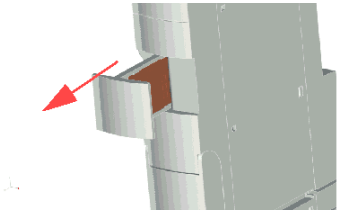
2	Push the removable memory card out of the drawer through the round opening at the back. Use a soft but firm object like a pencil eraser. 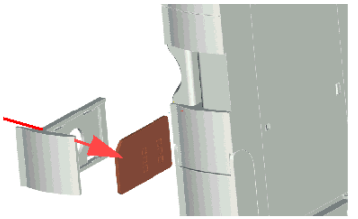

Wiring the Multiplexer

8

Overview

This chapter presents sample wiring diagrams for the HART multiplexer island, including:

- providing logic power to the NIM
- providing sensor and actuator power to:
  - power distribution modules
  - auxiliary power supply modules
- wiring the STB AHI 8321 HART interface module to I/O, which can be:
  - located in remote I/O drops
  - resident in the HART multiplexer island

What Is in This Chapter?

This chapter contains the following sections:

8.1 Providing Power to the HART Multiplexer

Wiring External Power Supplies to the HART Multiplexer Island

Logic Power

The STB NIP 2311 NIM provides 5 Vdc logic power to the HART multiplexer island backplane, and can provide 1.2 A of maximum current to island modules. If you place more modules in the primary island segment than the NIM can support, you can add an STB CPS 2111 auxiliary power supply to the island segment.

NOTE: Refer to the list of NIM, BOS and Auxiliary Power Supply Modules *(see page 56)* for information describing the logic power capacity of the STB NIP 2311 NIM. Refer to the list of Analog I/O modules *(see page 57)* for the power consumption requirements of island modules.

Input and Output Power

The STB PDT 3100 standard power distribution module (PDM) distributes power separately across the island's sensor bus to the input modules in its group and along the island's actuator bus to the output modules in its group. By contrast, the STB PDT 3105 basic power distribution module distributes a single supply of sensor and actuator power along a single bus.

If you place more modules in the primary island segment than either PDM can supply, you can add additional PDMs to the island. Placing a PDM to the right of a module group terminates the sensor and actuator bus for the preceding (leftward) group and begins a new (rightward) module group.

NOTE: Refer to the list of power distribution modules *(see page 58)* for information describing the logic power capacity of the STB PDT 3100 and STB PDT 3105 PDMs.

Providing Logic, Input and Output Power to the First Module Group

The first module in each HART multiplexer island is an STB NIP 2311 NIM, which provides logic power to the following modules. A PDM module is placed in the second position in the HART multiplexer island, and provides input (actuator) and output (sensor) power to the first module group.

The following graphic shows you how to provide power supply wiring to the STB NIP 2311 NIM and an STB PDT 3100 standard PDM:

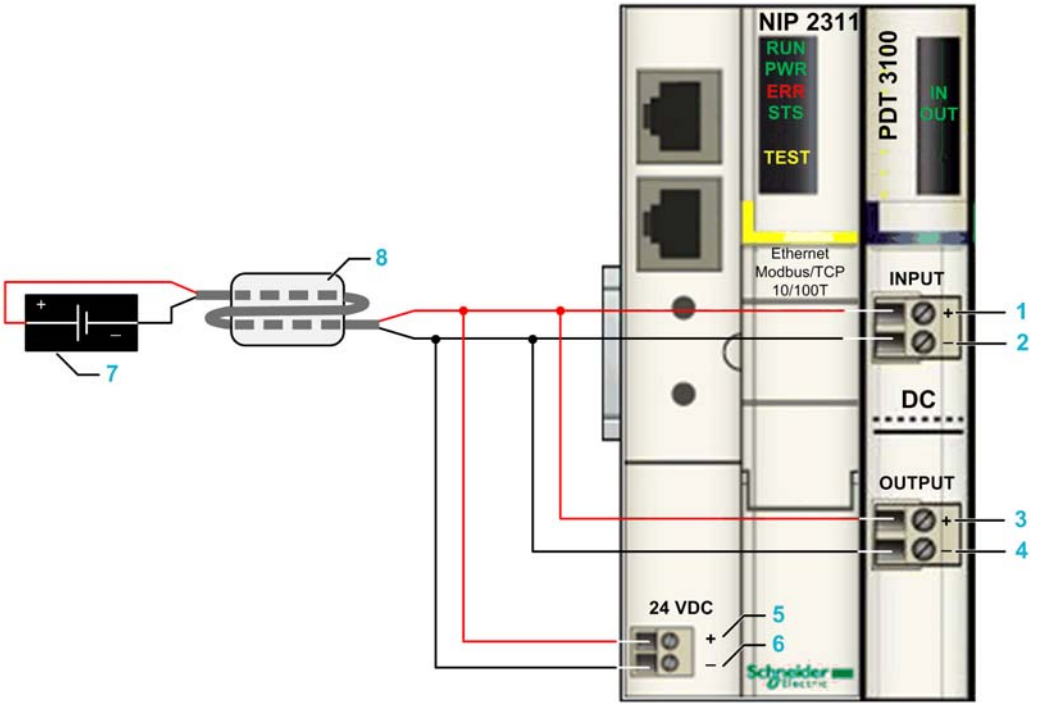

1 +24 Vdc sensor bus power
2 sensor bus return
3 +24 Vdc actuator bus power
4 actuator bus return
5 +24 Vdc island logic power supply
6 island logic power return
7 External 24 Vdc power supply
8 Wurth 74271633 ferrite bead

NOTE: To maintain CE compliance, use a Wurth 74271633 ferrite bead with NIM, PDM, BOS, and CPS power supplies. Pass the twisted pair wiring through the ferrite bead twice.

NOTE: This example presumes a single external power supply is adequate to meet the logic, actuator and sensor power requirements of the first module group. If this is not true, you can use separate external power supplies to provide each type of power.

Providing Logic, Input and Output Power to the Subsequent Module Groups

You begin a new (rightward) module group by inserting an additional PDM module into the island segment. The additional PDM provides input (actuator) and output (sensor) power to the new module group. You may also need to provide additional logic power to the new module group. In this case, you will add an auxiliary power supply.

The following graphic shows you how to provide power supply wiring to the STB CPS 2111 auxiliary power supply and an STB PDT 3100 standard PDM:

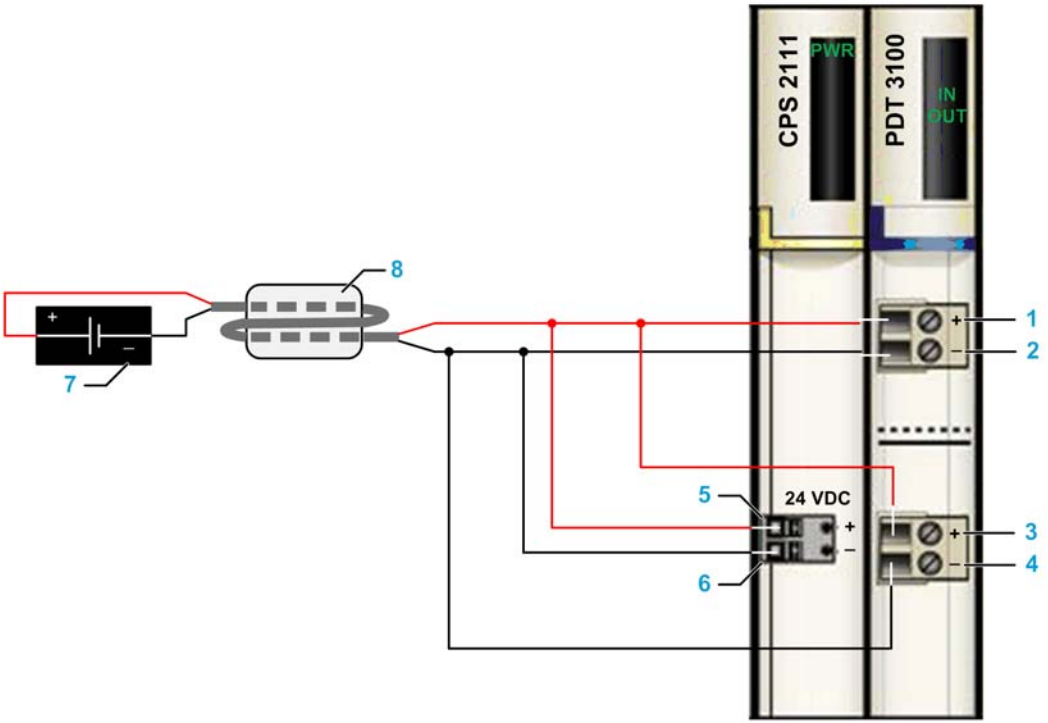

1 +24 Vdc sensor bus power
2 sensor bus return
3 +24 Vdc actuator bus power
4 actuator bus return
5 +24 Vdc island logic power supply
6 island logic power return
7 External 24 Vdc power supply
8 Wurth 74271633 ferrite bead

NOTE: To maintain CE compliance, use a Wurth 74271633 ferrite bead with NIM, PDM, BOS, and CPS power supplies. Pass the twisted pair wiring through the ferrite bead twice.

NOTE: This example presumes a single external power supply is adequate to meet the logic, actuator and sensor power requirements of the first module group. If this is not true, you can used separate external power supplies to provide each type of power.

8.2 Wiring the HART Multiplexer to I/O Modules

Overview

A single Schneider Electric HART multiplexer can support up to 32 current loop channels. The STB AHI 8321 HART interface module is a passive device. If the HART interface module loses its power, the operations of connected analog I/O and HART field devices continue without interruption.

The following topics depict HART multiplexers that support the maximum number of channels for I/O modules that are:

- resident in the HART multiplexer STB island
- located in a remote M340, Premium, or Quantum drop

NOTE: Current loop wiring to the STB AHI 8321 HART interface module are made using the STB XTS 2150 18-terminal clamp style connector that ships with the module.

Unplugging the I/O wiring connector on the STB AHI 8321 HART interface module breaks the 4-20 mA current loop connecting the analog I/O card to the field devices. Digital and analog communication on the loop will be lost.

⚠ WARNING

LOSS OF COMMUNICATION

Do not remove the I/O wiring connector on the STB AHI 8321 HART interface module while the system is operating under power.

Failure to follow these instructions can result in death, serious injury, or equipment damage.

What Is in This Section?

This section contains the following topics:

Resistance Calculation for Current Loop Wiring

Calculating Resistance Requirements

A load resistor may need to be connected in series with either terminal of a HART field instrument. The maximum series resistance in the circuit—including wiring lead resistance—is a function of the voltage supply, and can be calculated using the formula:

$$R_L = \left(\frac{Vs - 12}{0.023}\right) - R_S$$

R_L Load resistance expressed in ohms
Vs Voltage supply expressed in Volts
R_S Total loop resistance in ohms, including resistances of analog cards to which the HART instrument is to be serially connected

The following table displays examples of maximum series resistance at supply voltages, assuming $R_S = 0$:

Maximum Series Resistance (R_L)	**Supply Voltage**
1300 ohms	42.0 Volts
520 ohms	24.0 Volts
417 ohms	21.6 Volts
250 ohms	18.0 Volts
0 ohms	12.0 Volts

NOTE: The wiring diagrams depicted in this chapter include the necessary load resistors for those specific wiring designs. Use the preceding formula when calculating load resistance for wiring designs that differ from the wiring diagrams depicted in this chapter.

Setting Analog Output Rise and Fall Times for the STB AHI 8321 Module

Adjusting Output Module Rise and Fall Times

Many analog output modules can exceed the maximum rise and fall time—known as “slope”—that is recommended by the HART Foundation for current signals. A faster than recommended slope can cause variations in the HART signal. To help avoid this occurrence, configure the application that drives analog current outputs so that maximum output rise and fall time does not exceed:

`0.8ma/msec`

or

`(0.04 * Full Scale Value)/msec`

However, because the PLC, network interface module and analog I/O modules are updated only once every scan period, Schneider Electric recommends that analog current outputs be incremented or decremented 4% of full scale value every scan period until the desired current value is attained.

For example, in the case of an STB island with a scan period is 40 msec: for an output module (for example, the STB ACO 0220), the rise or fall slope should equal 4% of full scale value every 40 msec.

The following chart describes the relation between current and slope times for 4-20 mA current output modules:

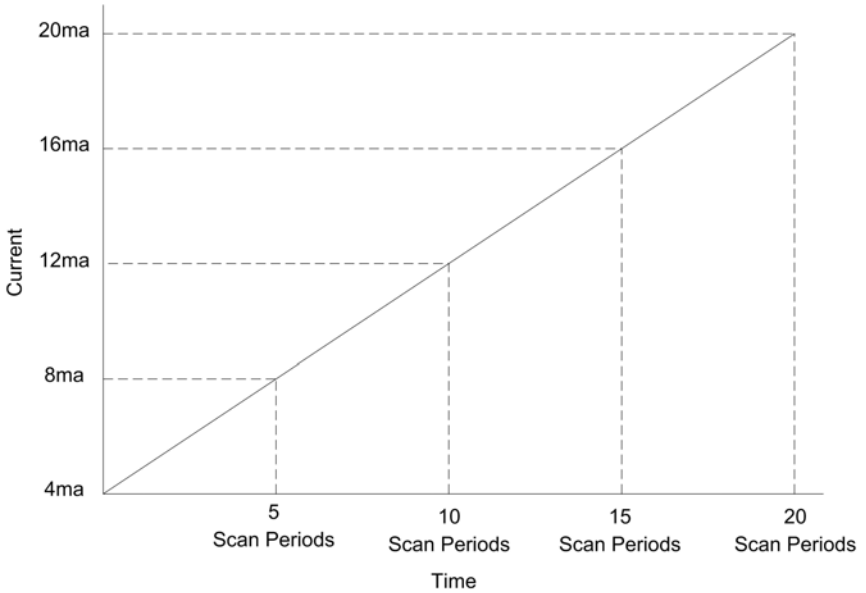

Slope <= 0.8ma / Scan Period

or

(0.04 * FullScale) / Scan Period

STB I/O Wiring Example

HART Multiplexer with Resident I/O

The STB input and output modules that you connect to the HART multiplexer can be located in:

- the HART multiplexer island
- an STB island that is separate from the HART multiplexer island

The specific placement of your input and output modules is determined by your specific application.

The following diagram provides an example of a HART multiplexer island that supports the maximum number of 32 analog channels—in this example, 28 input channels and 4 output channels. The input and output modules are resident in the HART multiplexer island. This HART multiplexer is assembled using the following STB equipment:

- Modules:
  - STB NIP 2311 network interface module (1)
  - STB PDT 3100 power distribution modules (5)
  - STB ACI 8220 4-channel analog input modules (7)
  - STB ACO 0220 2-channel analog output modules (2)
  - STB AHI 8321 HART interface modules (8)
  - STB CPS 2111 Auxiliary Power Supplies (4)
- Bases:
  - STB XBA 2200 base (5)—for power distribution modules
  - STB XBA 2100 bases (4)—for auxiliary power supplies
  - STB XBA 2000 Type 2 bases (9)—for analog I/O modules
  - STB XBA 3000 Type 3 bases (8)—for HART interface modules

A HART multiplexer with STB I/O:

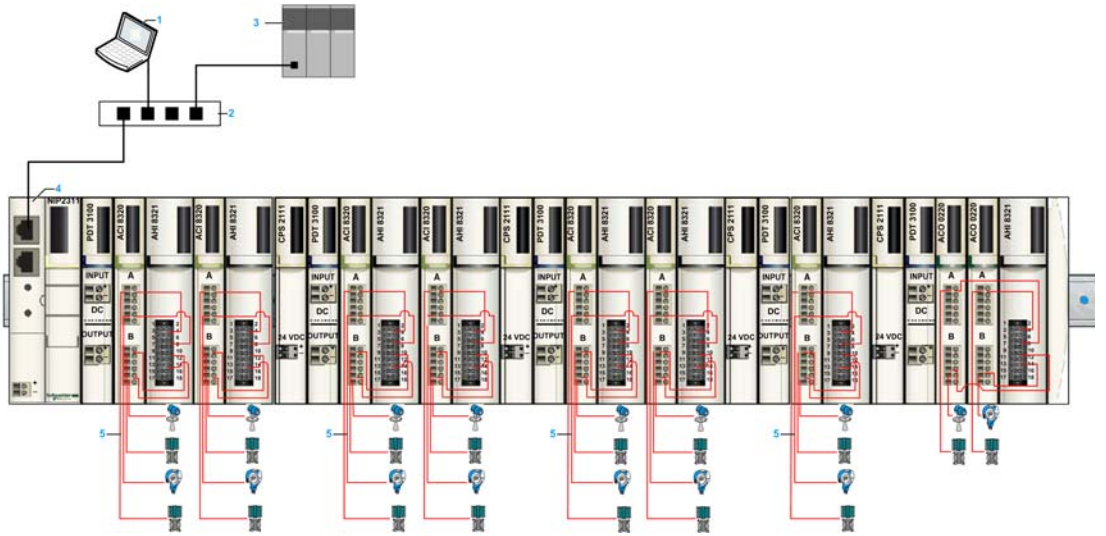

1 PC running asset management software
2 Ethernet switch
3 Fieldbus master (PLC)
4 HART multiplexer with resident I/O and HART interface modules
5 4-20 mA current loop wiring from I/O to HART instruments

When connecting the island modules to current loop wiring:

- use wire sizes in the range 0.20...0.82 mm^2 (24...18 AWG)
- strip at least 9 mm (0.35 in) from the wire's jacket for the module connection
- use shielded twisted-pair cable
- tie the twisted-pair cable shield to an external clamp that is tied to functional ground (FE)

NOTE: Refer to the following examples, for detailed wiring diagrams of inputs and outputs.

Wiring the STB ACI 8320 Input Module to the HART Interface Module

In this specific example:

- Current loop wiring connections are made directly from the HART compliant instruments to pins on the input module.
- Parallel wiring connections are made from the input module to the STB AHI 8321 for each HART channel.
- Each input module provides an internal 250 Ω resistor to the current loop.
- Each HART interface module provides an internal 260 Ω resistor to the current loop.

- Schneider Electric recommends that each current loop utilize a loop power supply *(see page 61)*.

NOTE: For other I/O modules and configurations, you need to calculate your specific resistance requirements *(see page 133)*.

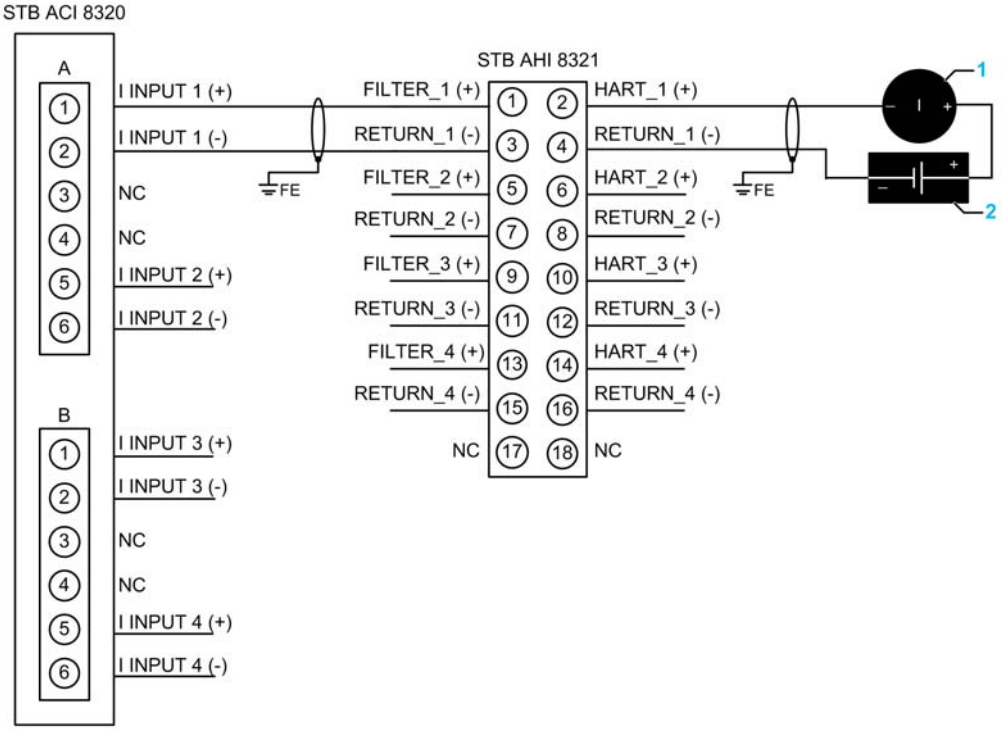

1 HART instrument
2 External 24 Vdc power supply

The STB ACI 8320 input module uses two six-terminal field wiring connectors. You can use either:

- two STB XTS 1100 screw type field wiring connectors
- two STB XTS 2100 spring clamp field wiring connectors

Each field wiring connector has six connection terminals, with a 3.8 mm (0.15 in) pitch between each pin.Individual connector terminals accept one field wire. Use shielded twisted pair wire sizes in the range 0.20...0.82 mm^2 (24...18 AWG).

Wiring the STB ACO 0220 Output Module to the HART Interface Module, Using Internal Power

The following diagram shows you how to wire the STB ACO 0220 output module to the STB AHI 8321 HART interface module for use as either a current source or a current sink.

- Current loop wiring connections are made from the HART compliant instruments, through the HART interface module, to pins on the output module. This design employs the 260 Ω HART filter in the STB AHI 8321HART interface module.
- Jumper connections are made on the STB ACO 0220 output module to apply 24 Vdc internal power to the current loop.
- An external 220 Ω resistor is applied to each current loop.

NOTE: It may be necessary to adjust the rise and fall times *(see page 134)* of analog output modules to facilitate HART communication.

NOTE: For other I/O modules and configurations, you need to calculate your specific resistance requirements *(see page 133)*.

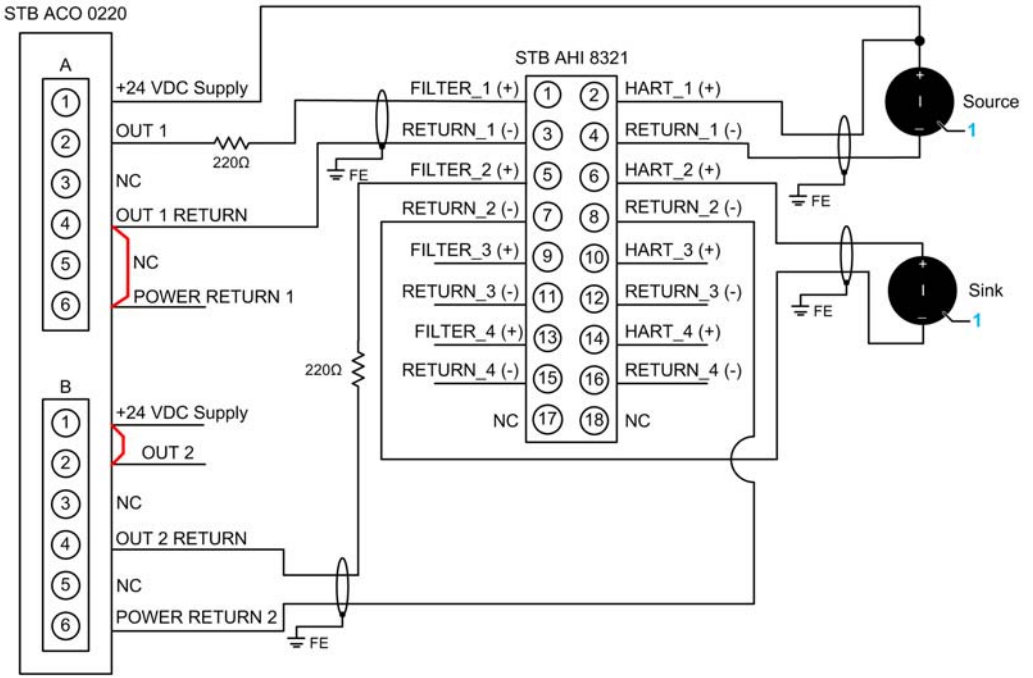

1 HART instrument

The STB ACO 0220 output module uses two six-terminal field wiring connectors. You can use either:

- two STB XTS 1100 screw type field wiring connectors
- two STB XTS 2100 spring clamp field wiring connectors

Each field wiring connector has six connection terminals, with a 3.8 mm (0.15 in) pitch between each pin.Individual connector terminals accept one field wire. Use shielded twisted pair wire sizes in the range 0.20...0.82 mm^2 (24...18 AWG).

Quantum I/O Wiring Example

HART Multiplexer and Remote Quantum I/O Drop

The following graphic depicts an overview of a HART multiplexer that supports the maximum number of 32 analog channels—28 input channels and 4 output channels. The input and output modules are located in a Quantum PLC drop.

This HART multiplexer is assembled using the following STB equipment:

- Modules:
  - STB NIP 2311 network interface module (1)
  - STB AHI 8321 HART interface modules (8)
  - STB PDT 3100 power distribution modules (3)
  - STB CPS 2111 auxiliary power supplies (2)
- Bases:
  - STB XBA 2100 bases (2)—for auxiliary power supplies
  - STB XBA 2200 bases (3)—for power distribution modules
  - STB XBA 3000 type 3 bases (8)—for HART interface modules

The Quantum PLC includes the following modules:

- 140 CPS 124 20 power supply (1)
- 140 CPU 651 50 central processing unit (1)
- 140 ACI 030 00 8-channel input modules (4)
- 140 ACO 020 00 4-channel output module (1)

A HART multiplexer with Quantum I/O:

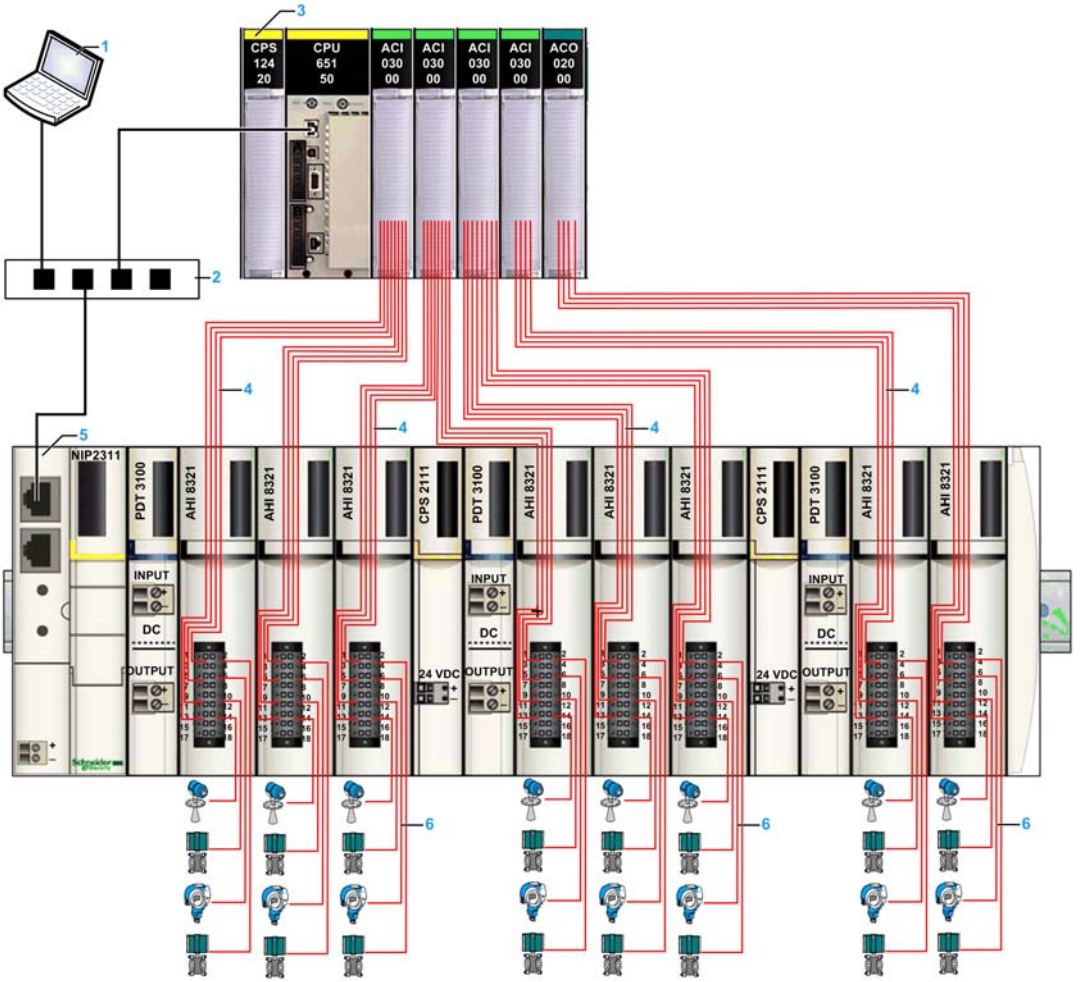

1 PC running asset management software
2 Ethernet switch
3 Quantum PLC with analog I/O
4 4-20 mA current loop wiring, connecting analog I/O and HART multiplexer
5 HART multiplexer
6 4-20 mA current loop wiring, connecting HART multiplexer to HART instruments

When connecting the island modules to current loop wiring:

- use wire sizes in the range 0.20...0.82 mm^2 (24...18 AWG)
- strip at least 9 mm (0.35 in) from the wire's jacket for the module connection
- use shielded twisted-pair cable
- tie the twisted-pair cable shield to an external clamp that is tied to functional ground (FE)

NOTE: Refer to the following examples, for detailed wiring diagrams of inputs and outputs.

Wiring the 140 ACI 030 00 Quantum Input Module to the HART Interface Module

In the following diagram:

- Current loop wiring is made through the STB AHI 8321 HART interface module thereby employing its 260 Ω internal HART filter.
- Schneider Electric recommends that each current loop utilize a loop power supply *(see page 61)*.
- Each input module provides an internal 250 Ω resistor to the current loop.

NOTE: For other I/O modules and configurations, you need to calculate your specific resistance requirements *(see page 133)*.

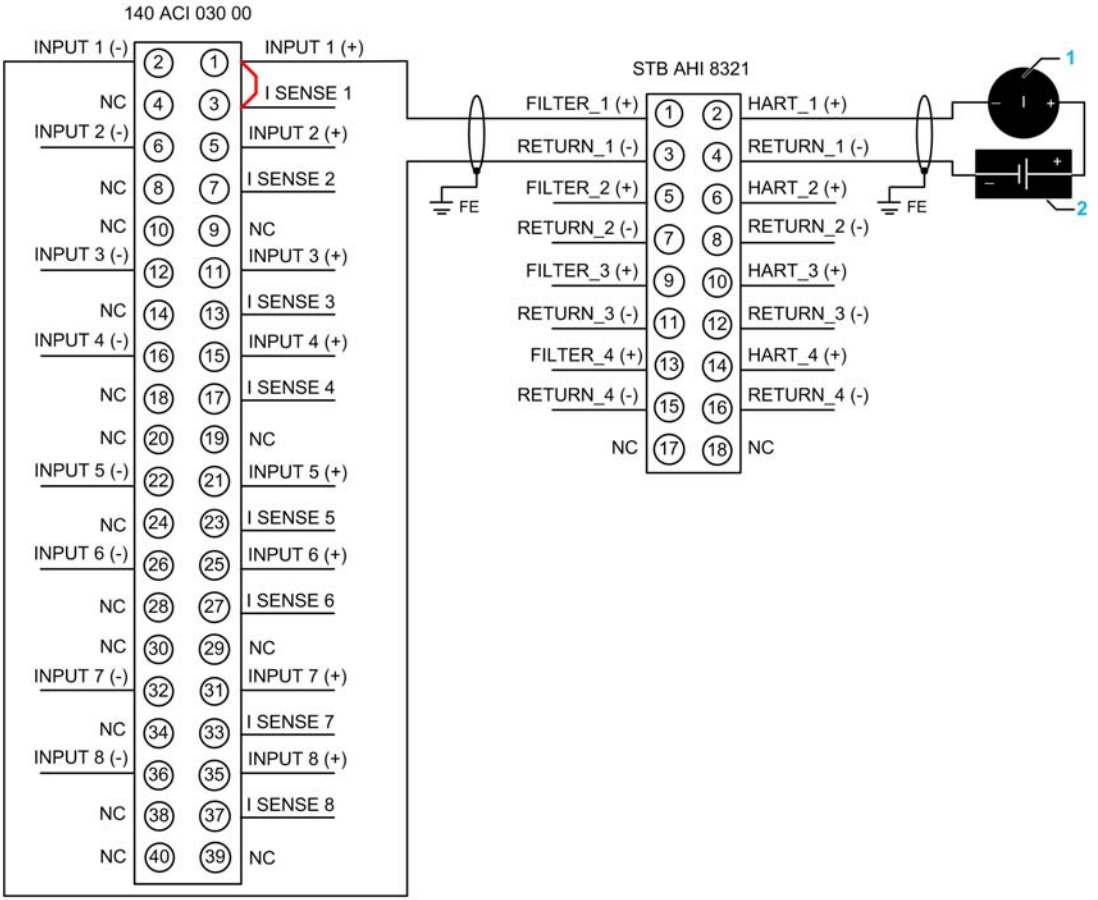

1 HART instrument
2 External 24 Vdc power supply

Wiring the 140 ACO 020 00 Quantum Output Module to the HART Interface Module

The following diagram shows you how to wire the 140 ACO 020 00 output module to the STB AHI 8321 HART interface module for use as either a current source or a current sink.

- Current loop wiring is made through the STB AHI 8321 HART interface module thereby employing its 260 Ω internal HART filter.
- Schneider Electric recommends that each current loop utilize a loop power supply *(see page 61)*.

NOTE: For other I/O modules and configurations, you need to calculate your specific resistance requirements *(see page 133)*.

NOTE: It may be necessary to adjust the rise and fall times *(see page 134)* of analog output modules to facilitate HART communication.

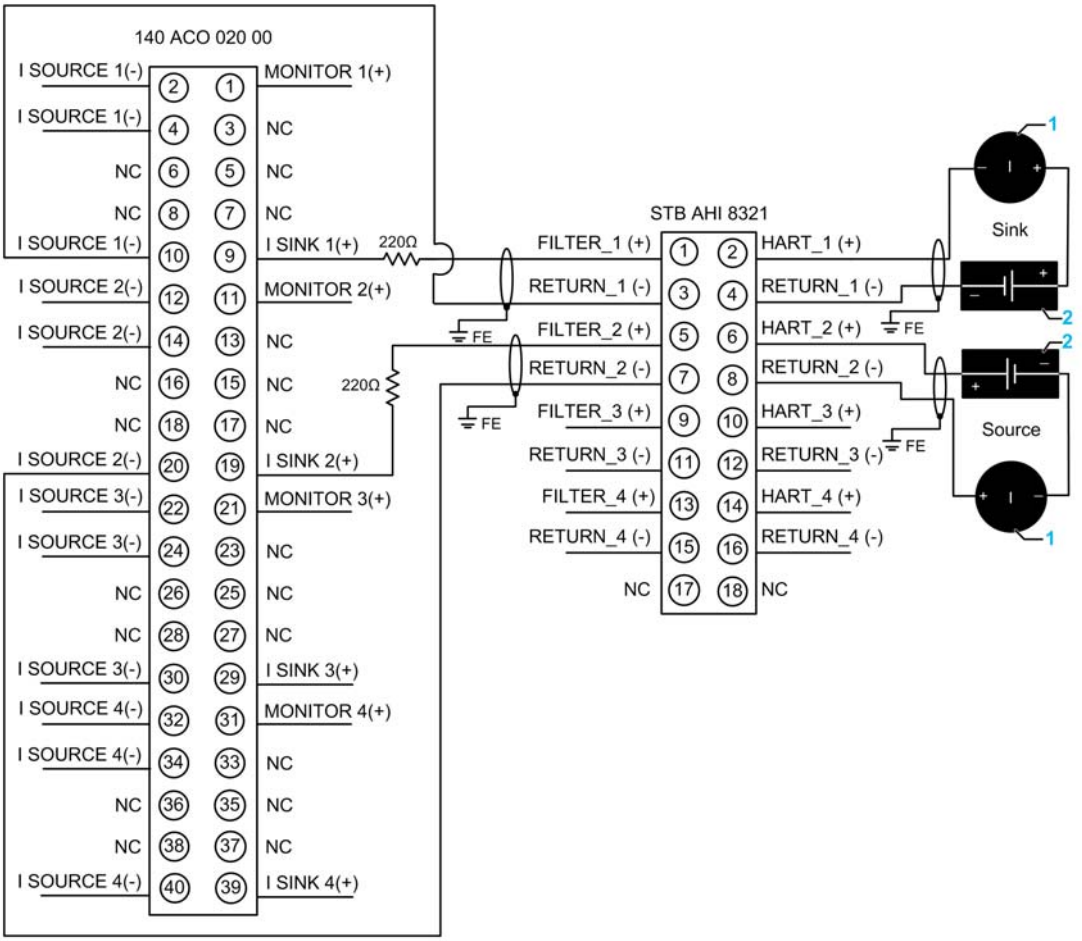

1 HART instrument
2 External 24 Vdc power supply

Premium I/O Wiring Example

HART Multiplexer and Remote Premium I/O Drop

The following graphic depicts an overview of a HART multiplexer that supports the maximum number of 32 analog channels—28 input channels and 4 output channels. The input and output modules are located in a Premium PLC drop.

This HART multiplexer is assembled using the following STB equipment:

- Modules:
  - STB NIP 2311 network interface module (1)
  - STB AHI 8321 HART interface modules (8)
  - STB PDT 3100 power distribution modules (3)
  - STB CPS 2111 auxiliary power supplies (2)
- Bases:
  - STB XBA 2100 bases (2)—for auxiliary power supplies
  - STB XBB 2200 bases (3)—for power distribution modules
  - STB XBA 3000 type 3 bases (8)—for HART interface modules

The Premium PLC includes the following modules:

- TSX PSY 2600M power supply (1)
- TSX P57 5634M central processing unit (1)
- TSX AEY 810 8-channel input modules (4)
- TSX ASY 410 ASY 4-channel output module (1)

A HART multiplexer with Premium I/O:

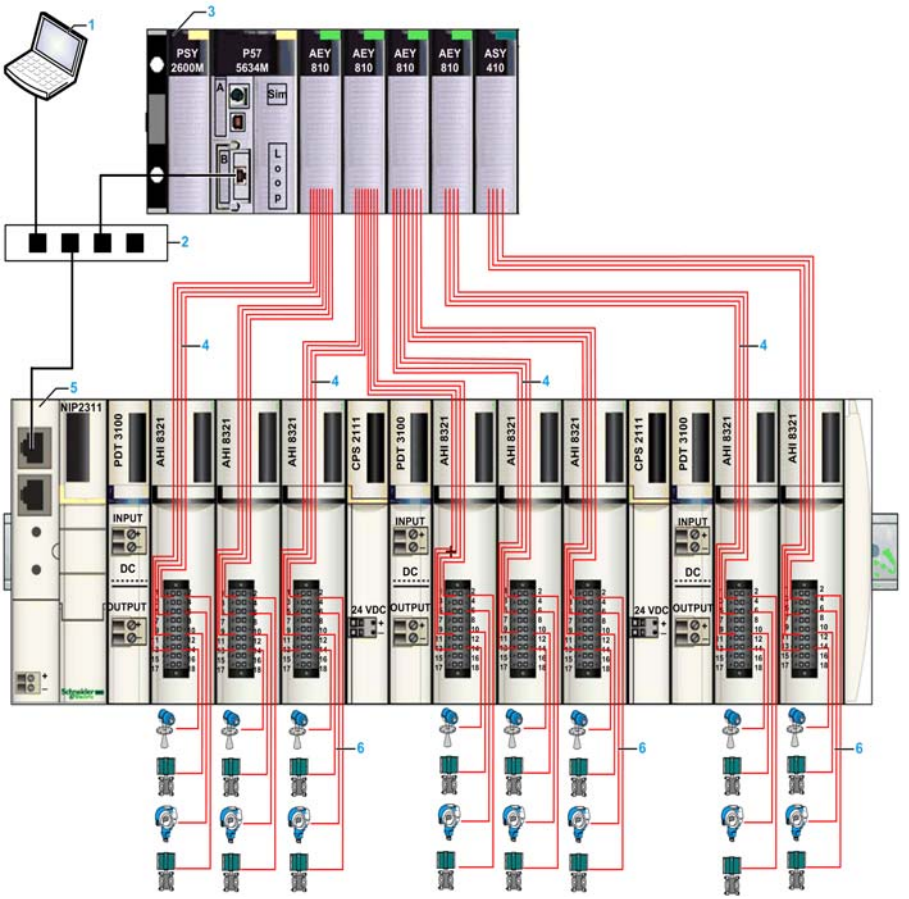

1 PC running asset management software
2 Ethernet switch
3 Premium PLC with analog I/O
4 4-20 mA current loop wiring, connecting analog I/O and HART multiplexer
5 HART multiplexer
6 4-20 mA current loop wiring, connecting HART multiplexer to HART instruments

When connecting the island modules to current loop wiring:

- use wire sizes in the range 0.20...0.82 mm^2 (24...18 AWG)
- strip at least 9 mm (0.35 in) from the wire's jacket for the module connection
- use shielded twisted-pair cable
- tie the cable shield to an external clamp tied to functional ground (FE)

NOTE: Refer to the following examples, for detailed wiring diagrams of inputs and outputs.

Wiring the TSX AEY 810 Premium Input Module to the HART Interface Module

In the following example:

- Because the TSX AEY 810 output module has no pin connectors, this example employs the ABE7CPA31E Telefast connector module.
- This design uses the 260 Ω internal HART filter of the STB AHI 8321 HART interface module.
- Wiring connections are made from the HART compliant instruments, through the STB AHI 8321 HART interface module, to pins on the ABE7CPA31E Telefast connector module.
- 24V power is supplied through to each channel through the ABE7CPA31E Telefast connector module.
- The TSX AEY 810 input module provides a 250 Ω resister to the current loop.

NOTE: For other I/O modules and configurations, you need to calculate your specific resistance requirements *(see page 133)*.

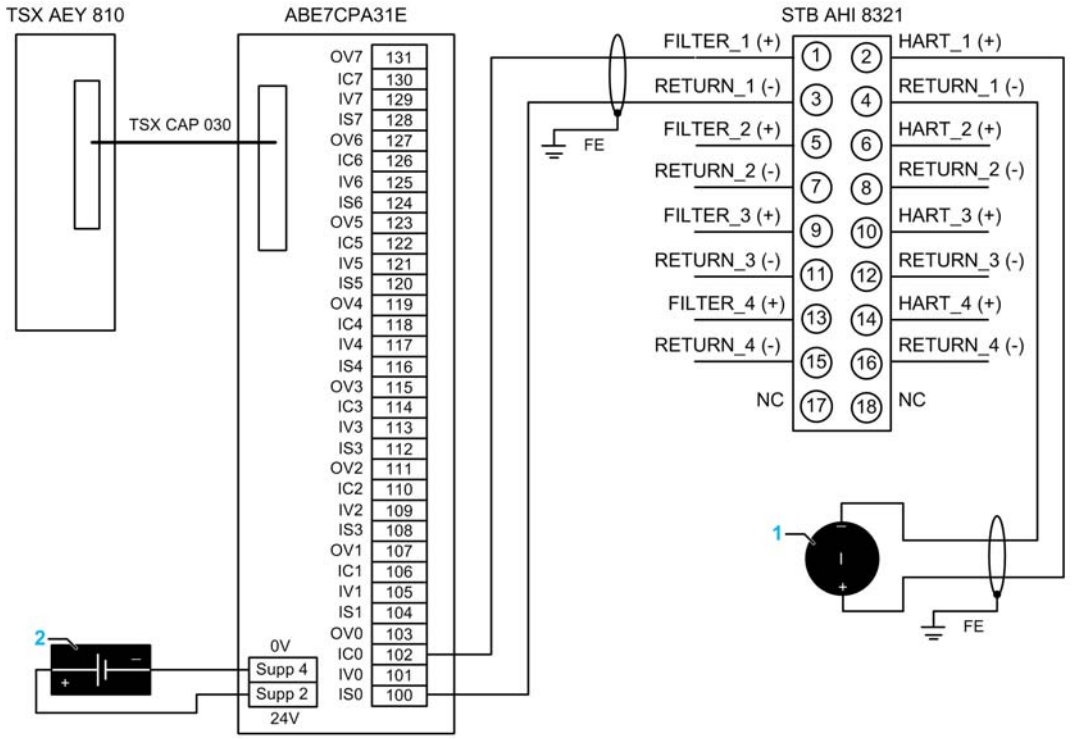

1 HART instrument
2 External 24 Vdc power supply

Wiring the TSX ASY 410 Premium Output Module to the HART Interface Module

The following diagram shows you how to wire the TSX ASY 410 output module to the STB AHI 8321 HART interface module.

- Current loop wiring is made through the 260 Ω internal HART filter of the STB AHI 8321 HART interface module.
- Wiring connections are made from the HART compliant instruments, through the STB AHI 8321 HART interface module, to pins on the TSX ASY 410 output module.
- Schneider Electric recommends that each current loop utilize a loop power supply.
- Each current loop employs a 220 Ω resistor placed between the output module and HART interface module.

NOTE: It may be necessary to adjust the rise and fall times *(see page 134)* of analog output modules to facilitate HART communication.

NOTE: For other I/O modules and configurations, you need to calculate your specific resistance requirements *(see page 133)*.

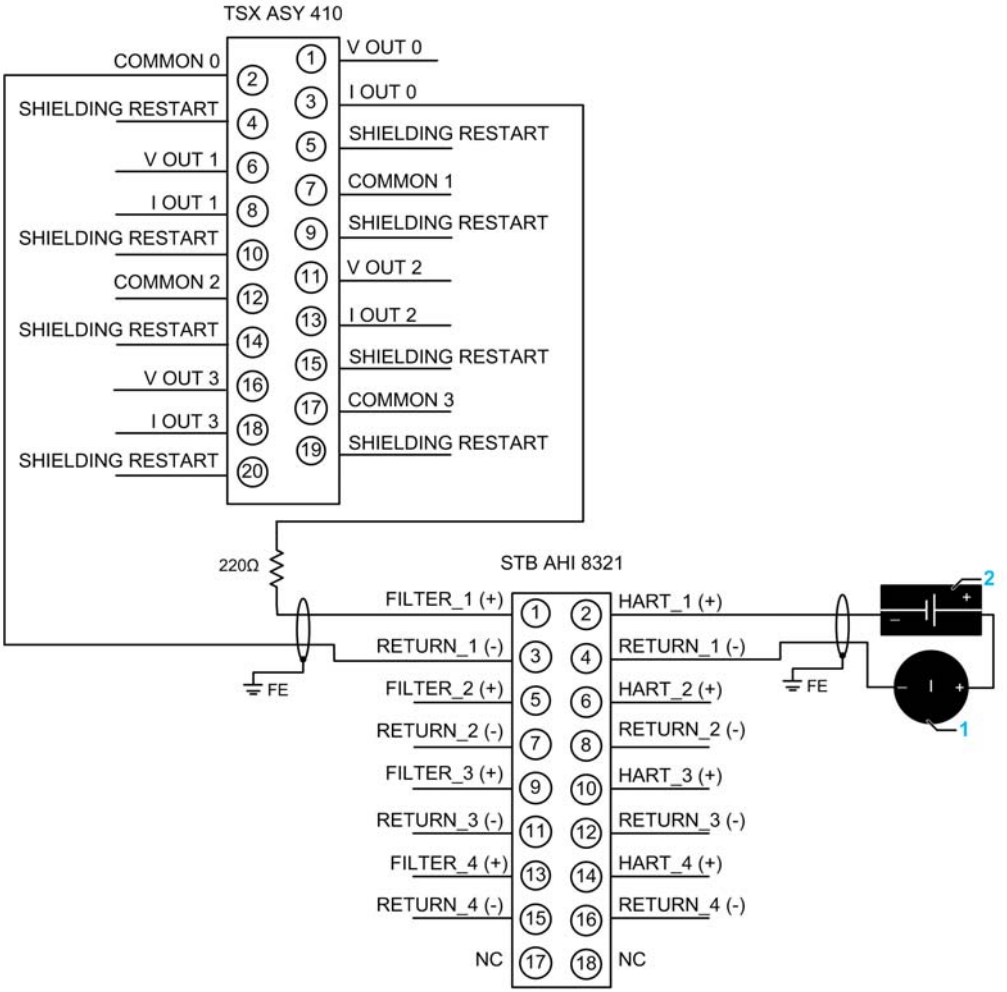

1 HART instrument
2 External 24 Vdc power supply

M340 I/O Wiring Example

HART Multiplexer and Remote M340 I/O Drop

The following graphic depicts an overview of a HART multiplexer that supports the maximum number of 32 analog channels—28 input channels and 4 output channels. The input and output modules are located in an M340 PLC drop.

This HART multiplexer is assembled using the following STB equipment:

- Modules:
  - STB NIP 2311 network interface module (1)
  - STB AHI 8321 HART interface modules (8)
  - STB PDT 3100 power distribution modules (3)
  - STB CPS 2111 auxiliary power supplies (2)
- Bases:
  - STB XBA 2100 bases (2)—for auxiliary power supplies
  - STB XBA 2200 bases (3)—for power distribution modules
  - STB XBA 3000 type 3 bases (8)—for HART interface modules

The M340 PLC includes the following modules:

- BMX CPS 3500 power supply (1)
- BMX P34 20302 central processing unit (1)
- BMX AMI 0310 4-channel input modules (7)
- BMX AMO 0210 ASY 4-channel output module (2)

A HART multiplexer with M340 I/O:

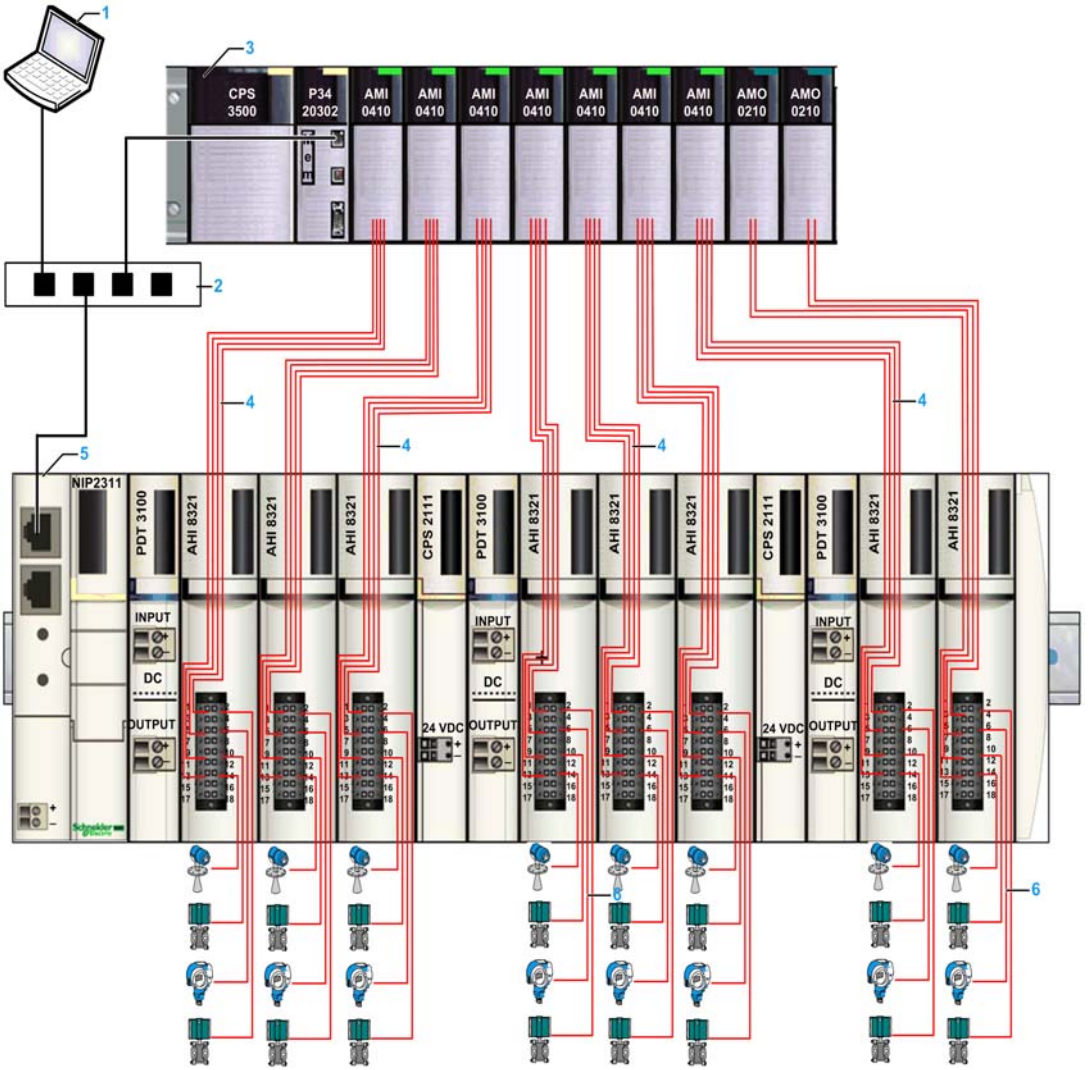

1 PC running asset management software
2 Ethernet switch
3 M340 PLC with analog I/O
4 4-20 mA current loop wiring, connecting analog I/O and HART multiplexer
5 HART multiplexer
6 4-20 mA current loop wiring, connecting HART multiplexer to HART instruments

When connecting the island modules to current loop wiring:

- use wire sizes in the range 0.20...0.82 mm^2 (24...18 AWG)
- strip at least 9 mm (0.35 in) from the wire's jacket for the module connection
- use shielded twisted-pair cable
- tie the twisted-pair cable shield to an external clamp that is tied to functional ground (FE)

NOTE: Refer to the following examples, for detailed wiring diagrams of inputs and outputs.

Wiring the BMX AMI 0410 M340 Input Module to the HART Interface Module

In the following diagram:

- Current loop wiring is made through the internal 260 Ω HART filter of the STB AHI 8321 HART interface module.
- Schneider Electric recommends that each current loop utilize a loop power supply *(see page 61)*.

NOTE: For other I/O modules and configurations, you need to calculate your specific resistance requirements *(see page 133)*.

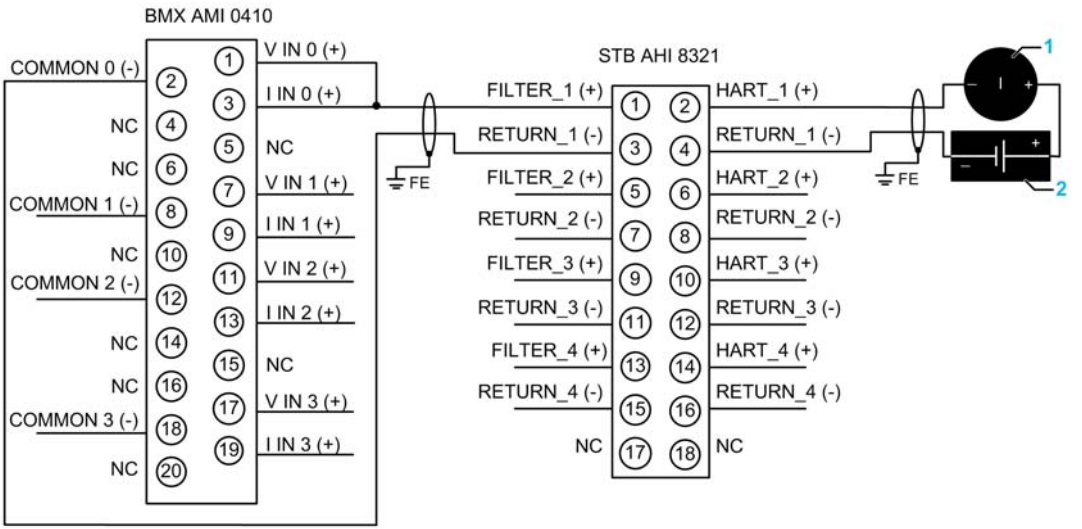

1 HART instrument
2 External 24 Vdc power supply

Wiring the BMX AMO 0210 M340 Output Module to the HART Interface Module

The following diagram shows you how to wire the BMX AMO 0210 output module to the STB AHI 8321 HART interface module.

- Current loop wiring is made through the internal 260 Ω HART filter of the STB AHI 8321 HART interface module.
- The BMX AMO 0210 output module supplies 24 Vdc internal power to each current loop, so an external power supply is not required.
- Each output module provides an internal 250 Ω resistor to the current loop.

NOTE: It may be necessary to adjust the rise and fall times *(see page 134)* of analog output modules to facilitate HART communication.

NOTE: For other I/O modules and configurations, you need to calculate your specific resistance requirements *(see page 133)*.

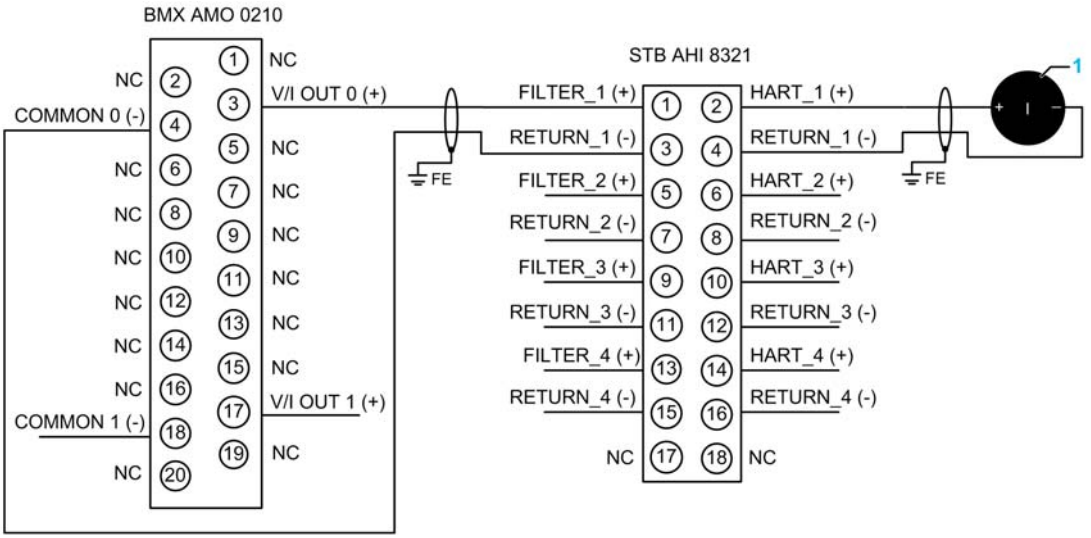

1 HART instrument

HART Device Management Software

9

Introduction to HART

A HART multiplexer can centralize the management of HART field instruments. From a PC with device management software, you can manage HART instruments that are connected to the multiplexer:

- Configure field instruments.
- Diagnose field instruments.
- Save field instrument configurations on your PC. (You can later download a configuration to a replacement field instrument.)
- Track changes made to field instruments.

What Is in This Chapter?

This chapter contains the following sections:

9.1 Configuring HART Devices

What Is in This Section?

This section contains the following topics:

Using the DTM

Introduction

Follow these instructions to add the DTM for the HART STB Multiplexer to your application. The instructions apply to these software platforms:

- **Unity Pro**: Unity Pro is high-performance PC-based multitask software for Modicon M340, Premium, and Quantum platforms from Schneider Electric.
- **Endress+Hauser FieldCare**: FieldCare is PC-based Asset Management Software.
- **PACTware**: PACTware (Process Automation Configuration Tool software) runs on a PC and communicates with field instruments through DTMs. PACTware is a free download that is device- and fieldbus-independent.

NOTE: The Schneider Electric HART DTMs are supported by STB NIP 2311 firmware version 4.01 or greater.

Download the DTMs

Download the Schneider Electric HART DTMs:

Step	Action
1	Go to the global Schneider Electric web site (www.schneider-electric.com).
2	Locate the DTM files (**Support** → **Documents & Downloads** → **Software/Firmware** → **DTM files**).
3	Download the Schneider Electric HART DTMs to your PC.
4	Unzip the downloaded files.
5	Double-click the executable file (.exe).
6	Follow the on-screen instructions to download the DTMs.

NOTE: A single installation file contains both the STB HART Multiplexer DTM and the Schneider Electric Generic HART Device DTM.

Initial Installation of DTMs and Device Catalog Update

If your software platform (**Unity Pro**, **Endress+Hauser FieldCare**, or **PACTware**) automatically detects the new DTM, follow the on-screen instructions to install the DTM and update your device catalog. Otherwise, use these steps the first time you install and update the DTMs:

Unity Pro:	
1	Open Unity Pro.
2	In the **DTM Browser**, right-click **Host PC** → **DTM Hardware Catalog**.
3	In the **Hardware Catalog**, press **Update**. (Unity Pro scans your PC and automatically imports all newly installed DTMs.)

Endress+Hauser FieldCare:	
1	Open Endress+Hauser FieldCare.
2	From the menu, select **DTM Catalog** → **Update**.
3	Press the **Update** button. (**NOTE:** Wait for the **Update progress** window to run. The new DTMs appear under **Device Types not part of DTM Catalog**.)
4	Select (left-click) the DTMs in **Device Types not part of DTM Catalog**.
5	Press the **Move >>** button to move the selected DTMs into **Device Types in DTM Catalog**.
6	Press **OK** to close and update the **DTM Catalog** window.
PACTware:	
1	Open PACTware (or open an existing PACTware project).
2	From the menu, select **View** → **Device Catalog**.
3	Press **Update device catalog**.
4	When the prompt for a new PACTware device catalog appears, say **Yes**. (PACTware scans and automatically imports all newly installed DTMs.)

Add the DTM to Your Program

Follow these steps to add the DTM (with your preferred software platform):

Unity Pro:	
1	Open Unity Pro.
2	In the **DTM Browser**, right-click **Host PC** → **Add**.
3	Select (left-click) **HART STB Multiplexer** in the **Devices** column.
4	Click **Add DTM**.
5	In the **Properties of Devices** dialog, press **OK**.
Endress+Hauser FieldCare:	
1	Open Endress+Hauser FieldCare.
2	Double-click **Create Project** (or open an existing project).
3	Right-click **Host PC** → **Add Device**.
4	Select (left-click) **HART STB Multiplexer** in the **Devices** column.
5	Press **OK**.
PACTware:	
1	Open PACTware (or open an existing PACTware project).
2	Right-click **Host PC** → **Add Device**.
3	Select (left-click) **HART STB Multiplexer** in the **Devices** column.
4	Press **OK**.

Access DTM Parameters

Use these commands to access the DTM parameters (with your preferred software platform):

Software	Right-Click ...
Unity Pro	**HART_STB_Multiplexer → Device → Configuration**
Endress+Hauser FieldCare	**HART_STB_Multiplexer → Configuration**
PACTware	**HART_STB_Multiplexer → Parameter → Configuration**

For each software platform, the same DTM configuration parameters screen appears:

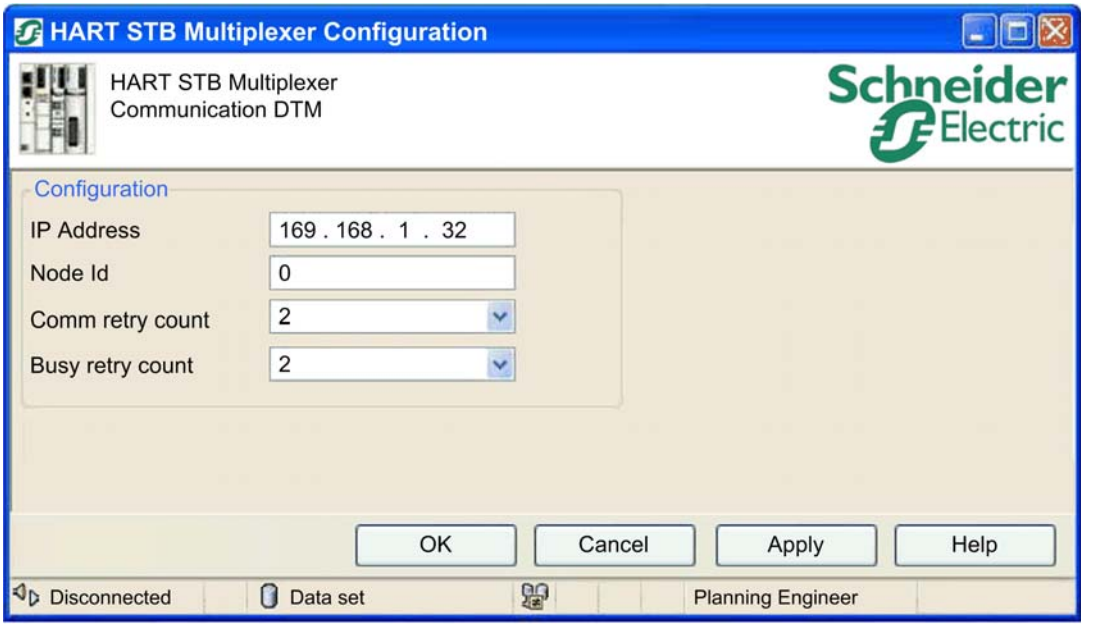

Configure DTM Parameters and Connect

Follow these steps to configure the parameters and connect the DTM:

Step	Action
1	Configure these parameters: ● **IP Address:** Enter the IP address of the STB NIP 2311 NIM on the STB island. ● **Node Id:** The Node Id (0...31) corresponds to the HART multiplexer. ● **Comm retry count:** This value represents the number of times that the HART interface module resends a command after it does not communicate with a HART instrument. ● **Busy retry count:** This value represents the number of times that the HART interface module resends a command after receiving a busy reply from a HART instrument.
2	Press **Apply** to apply all changes.
3	Right-click **HART_STB_Multiplexer** → **Connect** to connect the software platform to the DTM.

Find All HART Devices

Use your software to find HART field devices:

Software	Right-Click ...
Unity Pro	**HART_STB_Multiplexer** → **Fieldbus Discovery**
Endress+Hauser FieldCare	**HART_STB_Multiplexer** → **Create Network**
PACTware	**HART_STB_Multiplexer** → **Topology Scan**

NOTE:

- To search for HART field devices to add to your project, refer to the Unity Pro, Endress+Hauser FieldCare, and PACTware software documentation.
- Schneider Electric provides a generic DTM for HART field devices. Use the generic DTM when a HART field device does not have a device-specific DTM from the manufacturer. (The generic DTM contains online help.)
- Initially, the Schneider Electric generic HART DTM is “Unregistered Trial (0) day” (with limited functionality). A few moments after being instantiated, it changes to “Registered Professional.” The DTM is then fully functional and ready to use.
- Schneider Electric recommends that only 4 device DTM windows are active at any given time.
- Refer to www.schneider-electric.com for known resolutions concerning device-specific DTMs.

User Interface Configuration for the HART STB Multiplexer DTM

Introduction

To access the communication parameters for the user interface (UI) of the HART STB Multiplexer, right-click the DTM icon in the network view of your FDT (Field Device Tool) frame application and click `Configuration`:

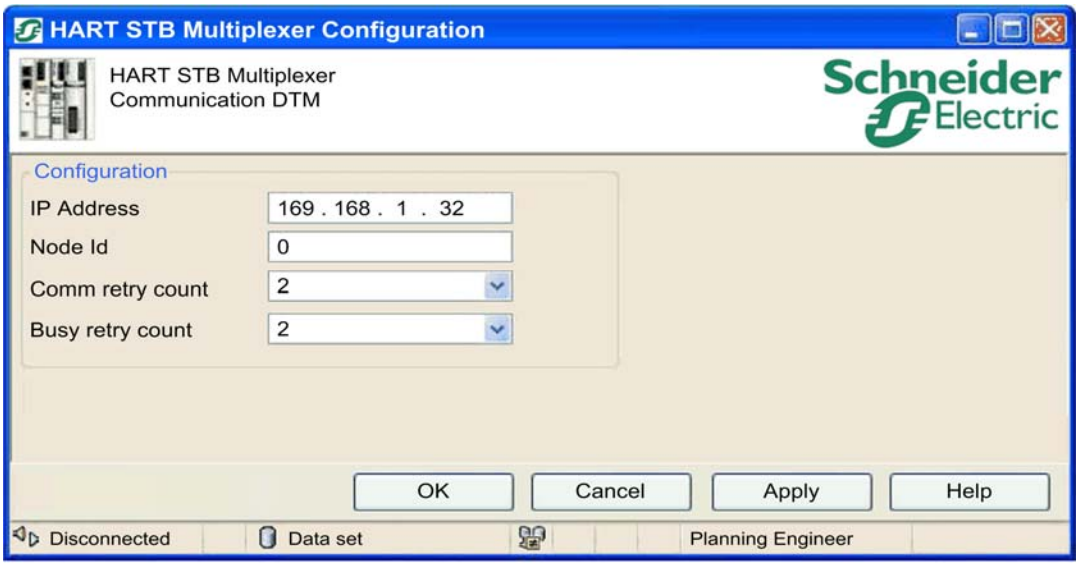

This table describes the components of the window:

Parameter	`IP Address`	Enter the IP address of the STB NIP 2311 NIM on the STB island.
	`Node Id`	Enter the node ID (0 ... 31) that corresponds to the HART multiplexer. (The default value is 0.)
	`Comm retry count`	Enter a value that represents the number of times that the HART interface module resends a command after it does not communicate with a HART instrument. (The default value is 2.)
	`Busy retry count`	Enter a value that represents the number of times that the HART interface module resends a command after receiving a busy reply from a HART instrument. (The default value is 2.)
Button	`OK`	Save all parameters and close the `Configuration` window.
	`Cancel`	Cancel the modification of all parameters and close the configuration window. (The original values are applied at the next connection.)
	`Apply`	Save the parameters. (The configuration window remains open. New parameter values are applied at the next connection.)

Offline (DTM) Parameters

The offline parameter UI of the HART STB Multiplexer DTM contains the parameters that are used in the DTM dataset. To view the offline parameters, right-click the DTM icon in the network view of your FDT frame application and click `Offline Parameter`:

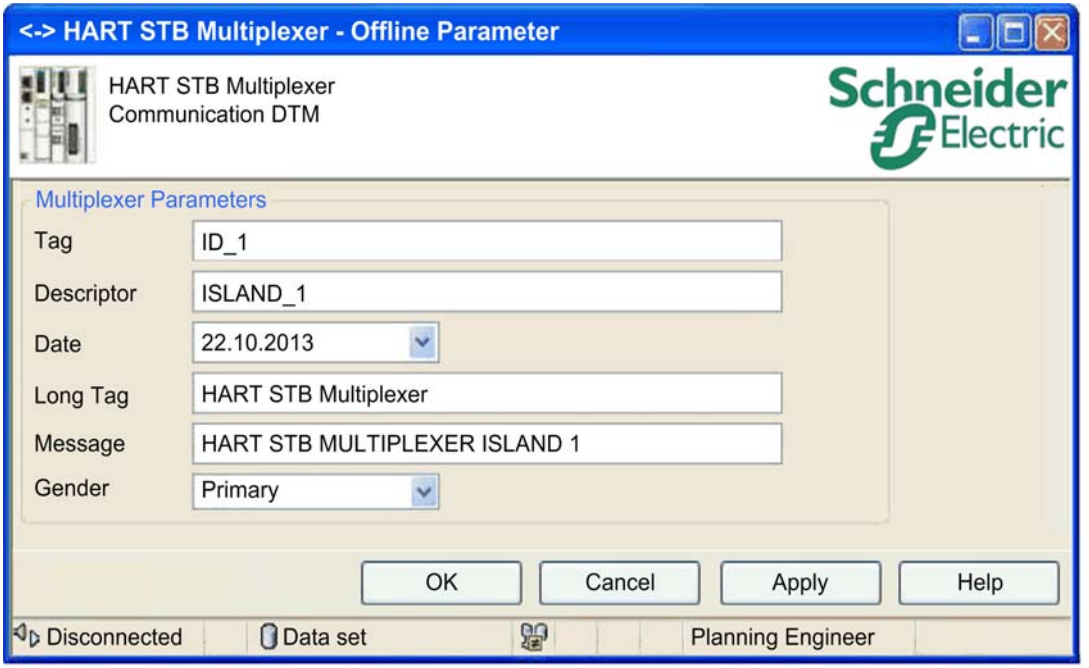

This table describes the read/write parameters for the `Offline Parameter` window:

Parameter	`Tag`	This field contains the HART tag name for the HART STB Multiplexer. It is used as the FDT tag name in the DTM. **NOTE:** The HART tag has an 8-character limit. However, some FDT frames allow tag names that exceed 8 characters. If there are more than 8 characters in the FDT frame, the HART STB Multiplexer DTM truncates all characters after the eighth character.
	`Descriptor`	This field contains the HART Descriptor (16-character maximum) for the HART STB Multiplexer.
	`Date`	This field contains the HART date field for the HART STB Multiplexer.
	`Long Tag`	This field contains the Long Tag name (16-character maximum) for the HART STB Multiplexer.
	`Message`	This field contains the HART message (32-character maximum) for the HART STB Multiplexer.
	`Gender`	The HART protocol provides for up to 2 masters (primary and secondary). This allows secondary masters such as handheld communicators to be used without interfering with communications to or from the primary master.
Button	`OK`	Save all parameters and close the configuration window.
	`Cancel`	Cancel the modification of all parameters and close the configuration window. (The original values are applied at the next connection.)
	`Apply`	Save the parameters. (The configuration window remains open. New parameter values are applied at the next connection.)

Online (Device) Parameters

The online parameter UI of the HART STB Multiplexer DTM contains the parameters that are set in the online dataset. To view the device parameters, right-click the DTM icon in the network view of your FDT frame application and click `Online Parameter`:

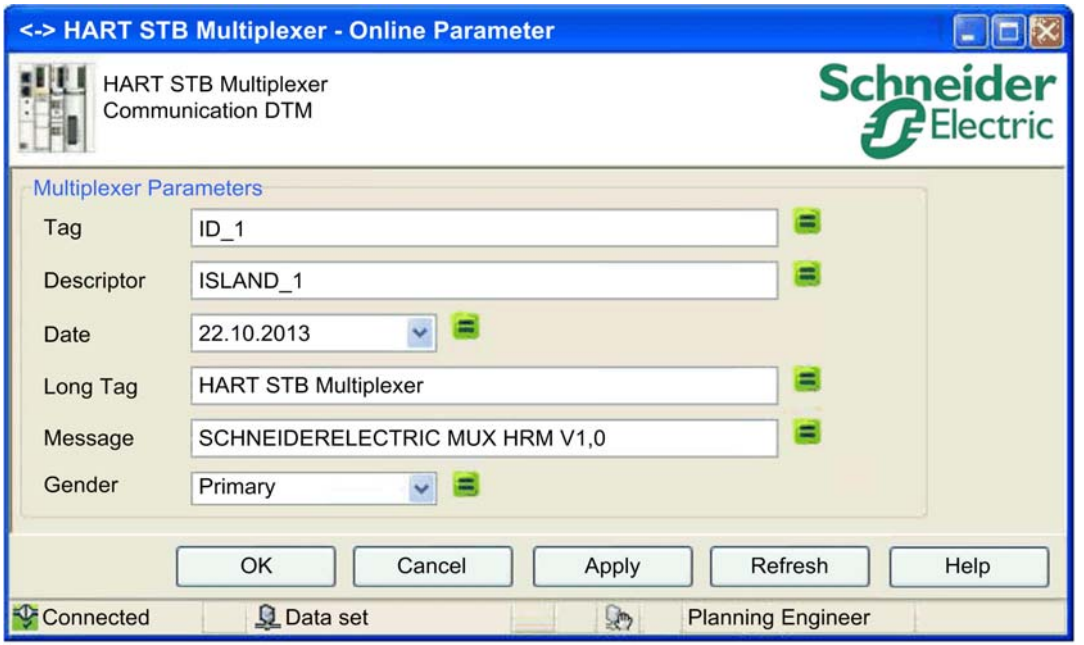
<-> HART STB Multiplexer - Online Parameter
HART STB Multiplexer
Communication DTM
Schneider Electric
Multiplexer Parameters
Tag
ID_1
Descriptor
ISLAND_1
Date
22.10.2013
Long Tag
HART STB Multiplexer
Message
SCHNEIDERELECTRIC MUX HRM V1,0
Gender
Primary
OK
Cancel
Apply
Refresh
Help
Connected
Data set
Planning Engineer

This table describes the parameters on the `Online Parameter` window:

Parameter	`Tag`	This field contains the HART tag name for the HART STB Multiplexer. It is used as the FDT tag name in the DTM. **NOTE:** The HART tag has an 8-character limit. However, some FDT frames allow tag names that exceed 8 characters. If there are more than 8 characters in the FDT frame, the HART STB Multiplexer DTM truncates all characters after the eighth character.
	`Descriptor`	This field contains the HART Descriptor (16-character maximum) for the HART STB Multiplexer.
	`Date`	This field contains the HART date field for the HART STB Multiplexer.
	`Long Tag`	This field contains the Long Tag name (16-character maximum) for the HART STB Multiplexer.
	`Message`	This field contains the HART message (32-character maximum) for the HART STB Multiplexer.
	`Gender`	The HART protocol provides for up to 2 masters (primary and secondary). This allows secondary masters such as handheld communicators to be used without interfering with communications to or from the primary master.
Button	`OK`	Save all parameters and close the configuration window.
	`Cancel`	Cancel the modification of all parameters and close the configuration window. (The original values are applied at the next connection.)
	`Apply`	Save the parameters. (The configuration window remains open. New parameter values are applied at the next connection.)
	`Refresh`	Upload all parameters from the device and display them in the window.
Equality Indication	These symbols apply to values in the window: 	
	green	**equal:** The online (device) value is equal to the offline (DTM) value.
	yellow	**not equal:** The online (device) value is not equal to the offline (DTM) value.

Diagnostics Configuration

The diagnostics UI of the HART STB Multiplexer DTM contains status information about the HART STB Multiplexer device. The diagnostics configuration screen contains these tabs:

- `Multiplexer Status`
- `Instrument Status`
- `HART Communication Status`

To access the diagnosis UI, right-click the DTM icon in the network view of your FDT frame application and click `Diagnosis`.

The `Multiplexer Status` shows the status of the HART STB Multiplexer:

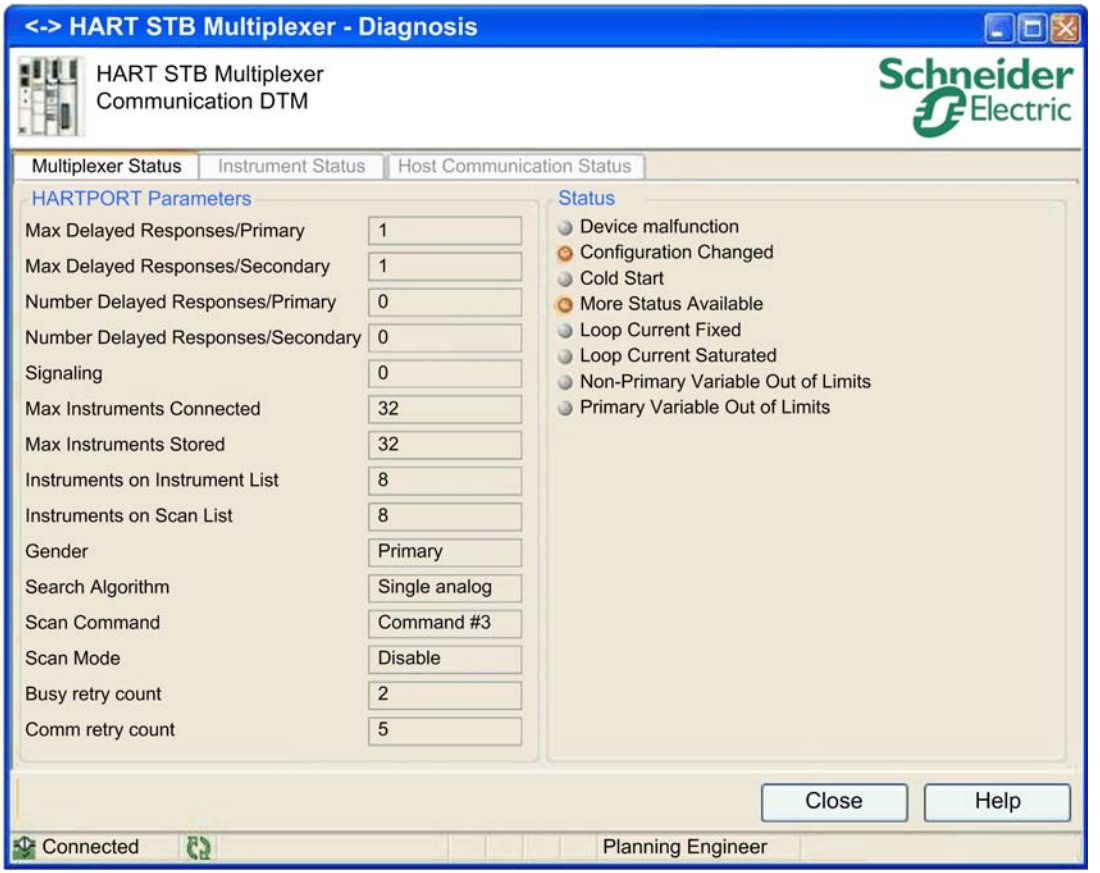

This table describes the read-only parameters on the `Multiplexer Status` tab:

HARTPORT Parameters	`Max Delayed Responses/Primary`	These fields display the number of supported messages that can simultaneously wait for data from HART instruments.
	`Max Delayed Responses/Secondary`	
	`Number Delayed Responses/Primary`	These fields display the number of messages that are waiting data from the HART instruments.
	`Number Delayed Responses/Secondary`	
	`Signaling`	This field displays the algorithm that is used for sending signals between a master and a device.
	`Max Instruments Connected`	This field displays the maximum number of instruments that can be connected to the HART STB Multiplexer.
	`Max Instruments Stored`	This field displays the maximum number of instruments that can be stored in the HART STB Multiplexer.
	`Instruments` on `Instrument List`	This field displays the number of stored instruments in the instrument list.
	`Instruments on Scan List`	This field displays the number of stored instruments in the scan list.
	`Gender`	The HART protocol provides for up to 2 masters (`Primary` or `Secondary`). This allows secondary masters such as handheld communicators to be used without interfering with communications to or from the primary master.
	`Search Algorithm`	This field displays the algorithm that the HART STB Multiplexer uses to search for an instrument in the loop.
	`Scan Command`	This field displays the command the HART STB Multiplexer uses to cache data from instruments on the scan list.
	`Scan Mode`	This field displays the scanner status (`Enable` or `Disable`).
	`Busy retry count`	This is the number of busy retries.
	`Comm retry count`	This is the number of communication retries.

Status	`Device Malfunction`	This indicator is not used by the HART STB Multiplexer.
	`Configuration Changed`	**ON:** The configuration of the HART STB Multiplexer has been changed.
	`Cold Start`	**ON:** The HART STB Multiplexer has been reset. **NOTE:** It is only set for the first command after the reset.
	`More Status Available`	**ON:** You can get additional status information through command 49. **NOTE:** The bit is cleared when command 48 is read.
	`Loop Current Fixed`	This indicator is not used by the HART STB Multiplexer.
	`Loop Current Saturated`	This indicator is not used by the HART STB Multiplexer.
	`Non-Primary Variable Out of Limits`	This indicator is not used by the HART STB Multiplexer.
	`Primary Variable Out of Limits`	This indicator is not used by the HART STB Multiplexer.
Button	`Close`	Close the window.

The `Instrument Status` tab displays the HART instruments that are connected to the HART STB Multiplexer:

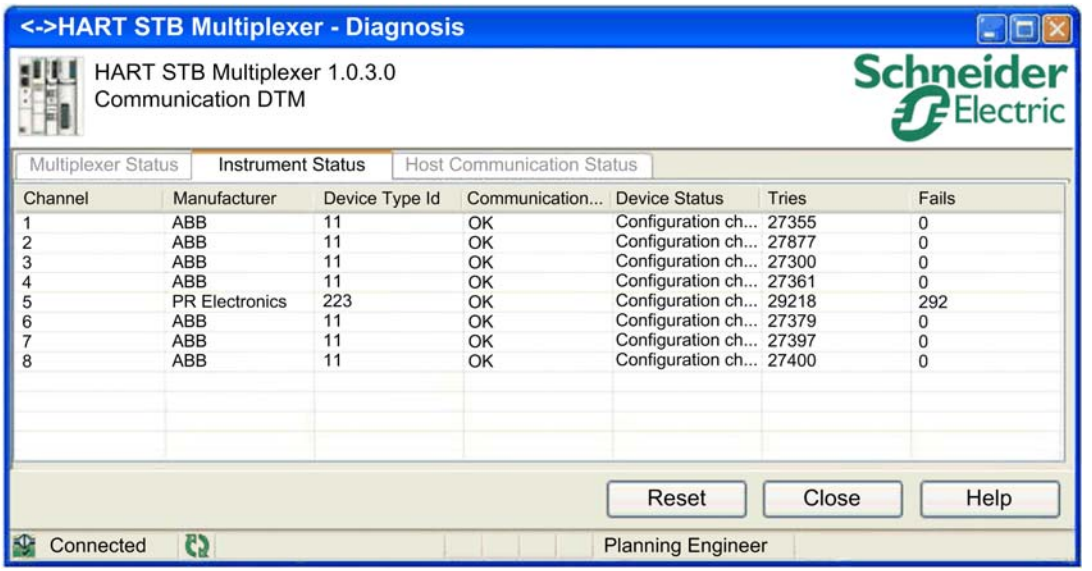

Channel	Manufacturer	Device Type Id	Communication...	Device Status	Tries	Fails
1	ABB	11	OK	Configuration ch...	27355	0
2	ABB	11	OK	Configuration ch...	27877	0
3	ABB	11	OK	Configuration ch...	27300	0
4	ABB	11	OK	Configuration ch...	27361	0
5	PR Electronics	223	OK	Configuration ch...	29218	292
6	ABB	11	OK	Configuration ch...	27379	0
7	ABB	11	OK	Configuration ch...	27397	0
8	ABB	11	OK	Configuration ch...	27400	0

This table describes the read-only parameters on the `Instrument Status` tab:

Parameter	`Channel`	This field contains the number of instruments stored in the instrument list. **NOTE:** This number may not match the actual channel that an instrument is connected to if the instrument was move from one channel to another.
	`Manufacturer`	This field contains the name of the instrument manufacturer.
	`Device Type Id`	This field contains the unique device type that is defined by the manufacturer.
	`Communication Status`	This field contains the number of communication errors that were detected since the last reset.
	`Device Status`	This field displays the set device status information that is stored in the HART STB Multiplexer.
	`Tries`	This field contains the total number of messages sent by the HART STB Multiplexer to the instruments.
	`Fails`	This field contains the total number of messages that included detected communication errors.
Button	`Reset`	Set all values in the **Tries** and **Fails** columns to 0.
	`Close`	Close the window.

The `Host Communication Status` tab displays the status of the host:

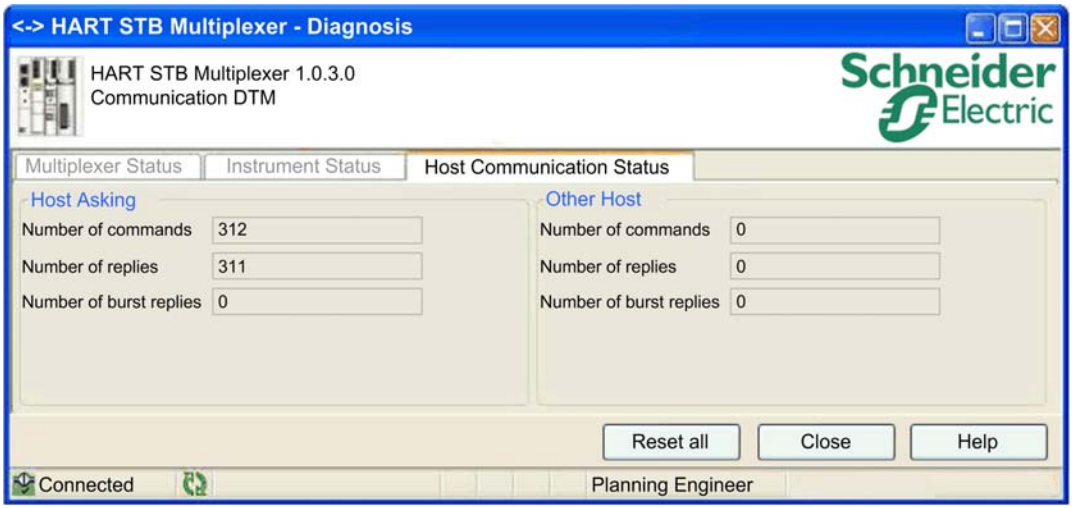

This table describes the read only parameters on the `Host Communication Status` window:

Parameter	Description
`Number of commands`	This field contains the total number of messages received by the multiplexer from a client.
`Number of replies`	This field contains the total number of replies sent by the multiplexer back to the client.
`Number of burst replies`	This value is always 0. (The HART STB Multiplexer does not support burst replies.)

9.2 AMS Device Management Software Example

Overview

This section explains the use of Emerson Process Management's *AMS Device Manager, Version 10.5* software (including its *Network Configuration* tool).

It also includes an introduction to Eltima Software's *Serial to Ethernet Connector, Version 5.0*, which allows device management software programs (Unity Pro, FieldCare, PACTware) to communicate over Ethernet.

NOTE: The following example describes third-party software. Refer to the manufacturer's product documentation for detailed operating instructions.

What Is in This Section?

This section contains the following topics:

Eltima Software *Serial to Ethernet Connector* **Setup**

Converting an Ethernet Port to a Virtual Serial Port

The Schneider Electric HART multiplexer communicates via Ethernet connections. Device management software typically communicates via serial connections. This topic introduces the *Serial to Ethernet Connector* software application from Eltima Software. You can use this software to enable communication between device management software and the Schneider Electric HART multiplexer.

NOTE: The following example describes third-party software. Refer to the manufacturer's product documentation for detailed operating instructions.

Eltima Software Setup

To configure the Eltima Software *Serial to Ethernet Connector* program, follow these steps:

Step	Action
1	Install the Eltima Software *Serial to Ethernet Connector* program on your PC by following the manufacturer's installation instructions.
2	Start up the *Serial to Ethernet Connector* program.
3	Click on the **Create connection** tab to display the following page: 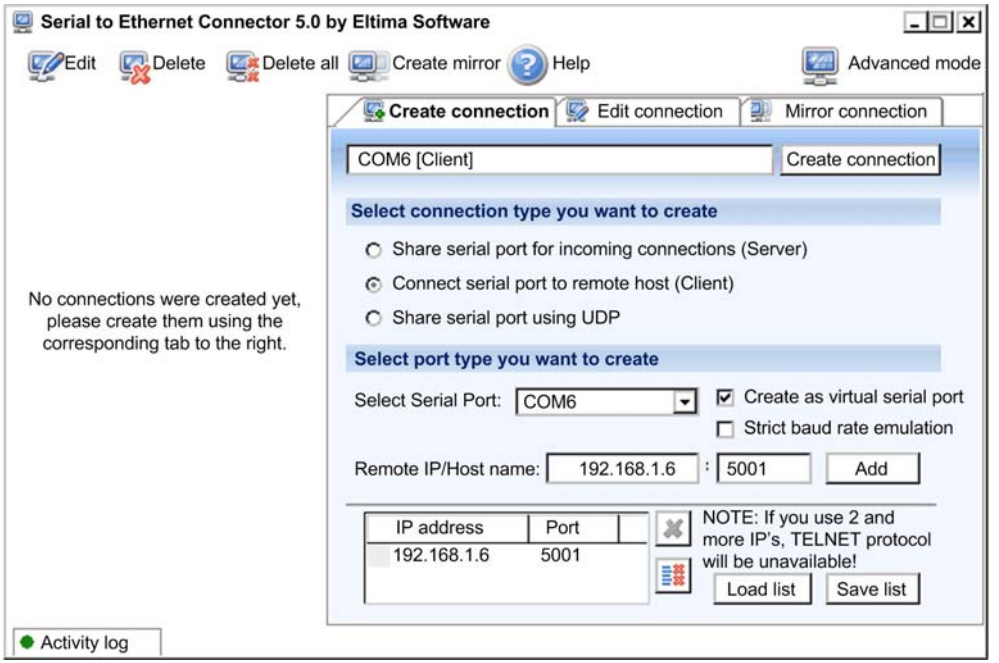
4	In the **Create connection** page (above), enter the following connection settings:

Setting	Description
Connection type	Select **Connect serial port to remote host (Client)**.
Port type	Select an unused serial port—in this case, **COM6**.
Virtual serial port	Select **Create as virtual serial port**. **NOTE:** This setting may be pre-selected and read-only.
Remote IP/ Host name	Type in the IP address of the HART multiplexer network interface module—in this case, **192.168.1.6**.
Socket number	Type in the socket number, **5001**. **NOTE:** The HART server uses socket number 5001.

Step	Action
5	Click **Add** to add the new connection to the connection list.
6	Repeat steps 4 and 5 for each additional connection you wish to add to the list. **NOTE:** Each HART multiplexer on your network requires a separate COM port. In this example, with only one multiplexer, no additional connections are required.
7	When all connections have been added, click **Create connection**. The new connections are created, and the page looks like this: 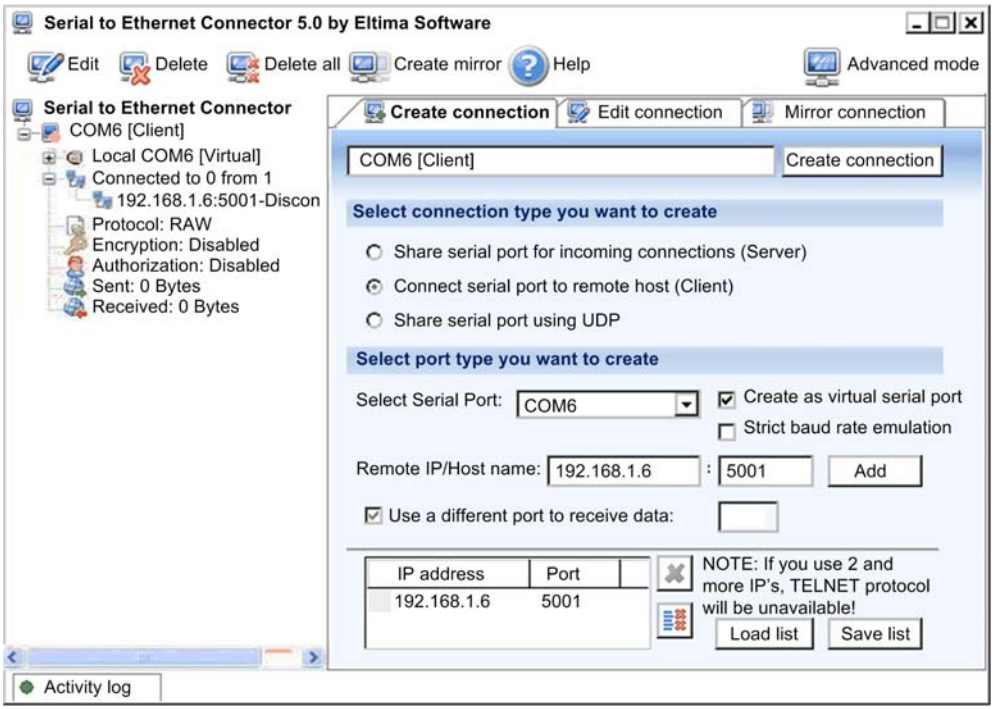

Step	Action
8	After the serial port is also configured in the HART OPC server, you can use this screen to observe the communication between the PC and the multiplexer. This screen will display the connected state, and the number of bytes sent and received over the connection: 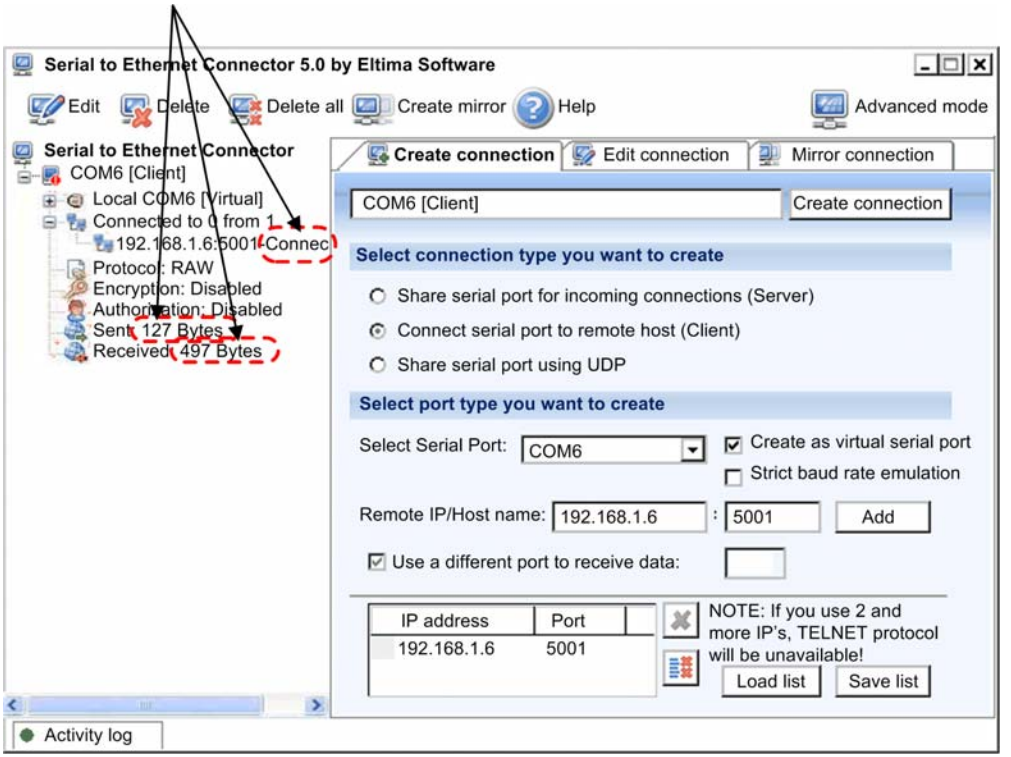

Add the Schneider Electric Multiplexer to the AMS Device List

Introduction

This topic shows you how to add a Schneider Electric HART multiplexer device definition file (DD) to the AMS device list. After the Schneider Electric HART multiplexer DD is added, the AMS software will recognize the Schneider Electric HART multiplexer when it rebuilds the hierarchy of your HART network.

The Schneider Electric HART multiplexer DD file ships with your STB AHI 8321 HART multiplexer module installation CD, and is named: `0101.fm6`.

Adding the Schneider Electric DD File

Use the *Add Device Type* AMS software tool to perform this task. The *Add Device Type* tool is installed on your PC as part of the *AMS Device Manager Suite*. Follow these steps:

Step	Action
1	Copy the Schneider Electric HART Multiplexer DD file (`0101.fm6`) from your STB AHI 8321 installation disk to a location on your PC's hard drive.
2	Startup the *Add Device Type* tool by selecting **Start** → **AMS Device Manager** → **Add Device Type**. The following message displays: 

Step	Action
3	Click **OK**. The following navigation dialog opens: 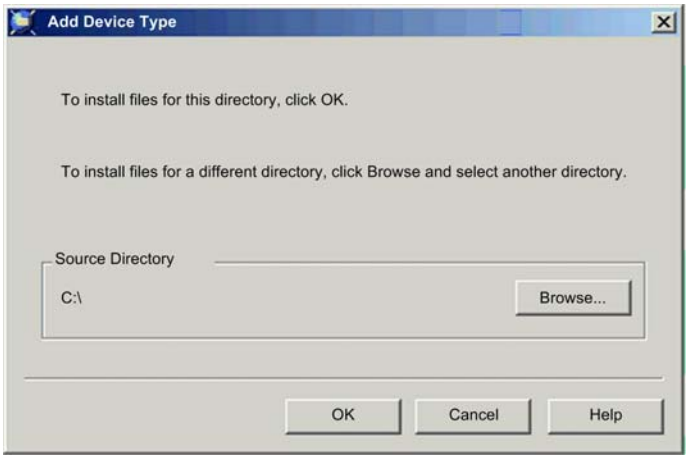
4	Click **Browse...** to open the following navigation dialog: 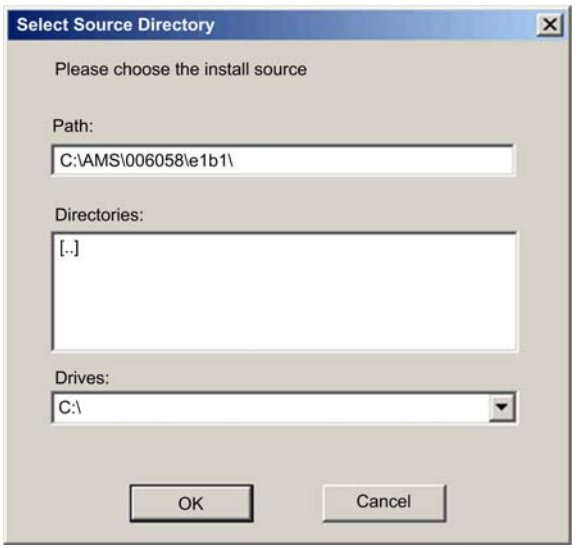
5	Click in the **Directories** area of this dialog to navigate to and select the folder that contains the Schneider Electric HART multiplexer DD file. In this case, that path is C:\AMS\006058\e1b1.

Step	Action
6	Click **OK** to close the **Select Source Directory** dialog. The selected directory appears as the **Source Directory**: 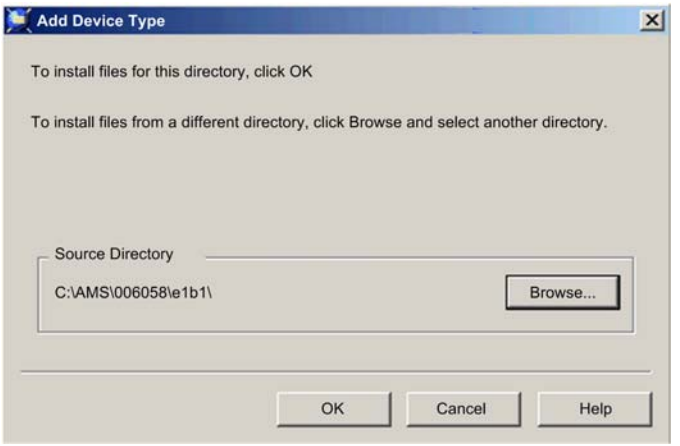
7	Click **OK** to close the **Add Device Type** dialog.
8	The following dialog may open:  If this dialog opens, enter the following information: ● **:** Schneider Electric ● **Device's name:** HRM V1.0 Click **OK** to close the dialog.

Step	Action
9	The following message appears, indicating the Schneider Electric HART multiplexer DD file is saved to the AMS device list:  Click **OK** to close the message.

Creating a HART Multiplexer Network

Introduction

The first task to perform when working with Emerson Process Management's *AMS Device Manager, Version 10.5* software is to create a new HART multiplexer network. To do this, use the *Network Configuration* tool that installs on your PC as part of the *AMS Device Manager Suite*.

Creating a New HART Network

Follow these steps to create a new HART multiplexer network:

Step	Action
1	Install the *AMS Device Manager, Version 10.5* software, following the manufacturer's installation instructions.
2	Startup the *Network Configuration* tool, by selecting **Start** → **AMS Device Manager** → **Network Configuration**. The **Network Configuration** dialog opens: 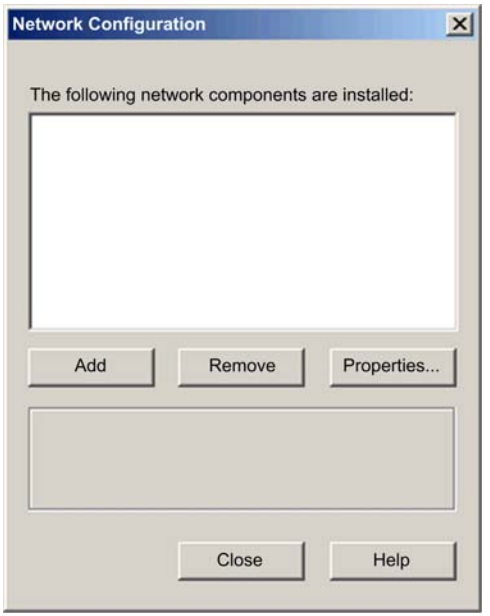

Step	Action
3	Click **Add**. The **Select Network Component Type** dialog opens: 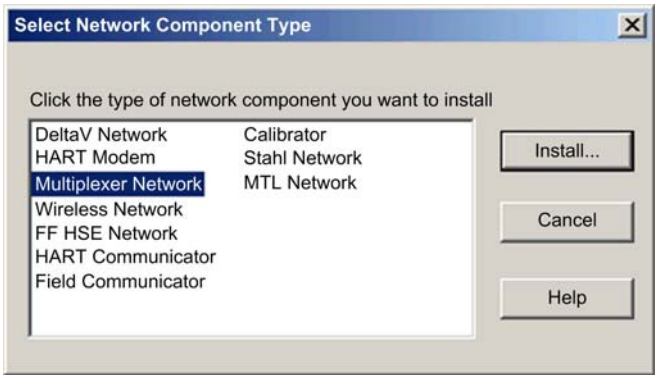
4	Select **Multiplexer Network**, then click **Install...**. The following dialog opens for starting the new network wizard: 

Step	Action
5	Click **Next**. The following dialog opens for naming the new network: 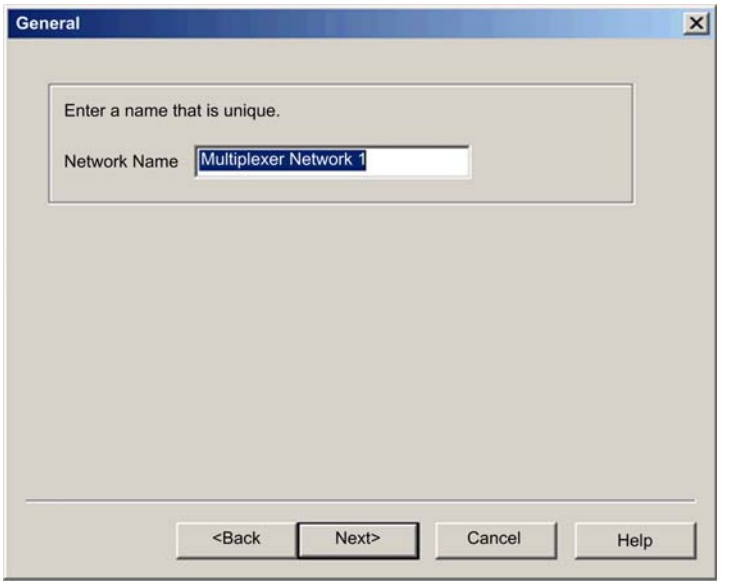

Step	Action
6	For the purpose of this example, accept the default network name **Multiplexer Network 1**, then click **Next>**. The following dialog opens: 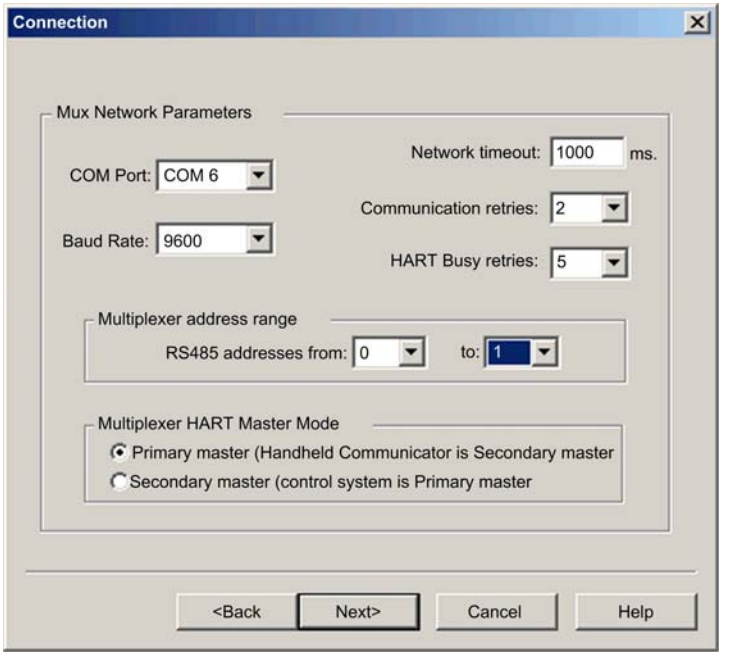

Step	Action
7	In the **Connection** dialog, define the COM port connection the new multiplexer network will use. Enter the following settings: ● **COM Port**: Select COM 6. This is the same COM port that was previously configured using the Eltima software *(see page 173)*. ● **Baud Rate**: Select 9600. ● **Network Timeout**: Accept the default value of 1000. ● **Communication Retries**: Select 2. ● **HART Busy retries**: Select 5. ● **RS485 addresses**: Select from 0 to 1. ● **Multiplexer HART Master Mode**: Select Primary master. Click **Next>**. The **Connection** dialog closes, and the **Network Configuration** dialog displays the new network: 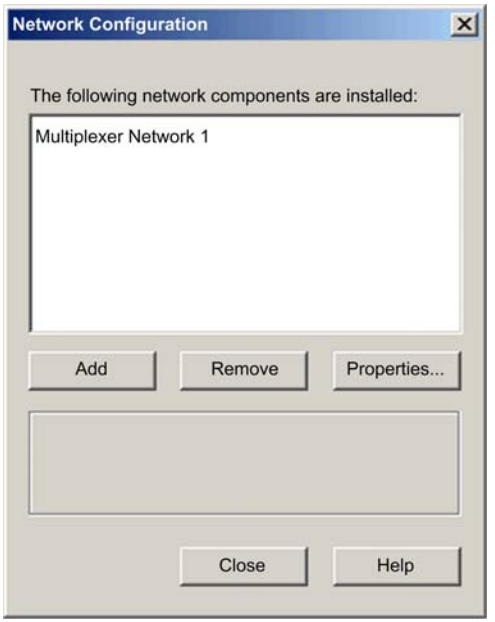
8	Click **Close** to close the *Network Configuration* tool.

Managing HART Network Devices

Introduction

The next task is to open the *AMS Device Manager* tool, confirm that it includes the Schneider Electric HART multiplexer in its device list, then automatically discover the HART instruments connected to the Schneider Electric HART multiplexer. The *AMS Device Manager* tool installed on your PC when as part of the *AMS Device Manager Suite*.

Discovering the New Network

To view the HART instruments connected to the new network, follow these steps:

Step	Action
1	Startup the *AMS Device Manager* by selecting **Start** → **AMS Device Manager** → **AMS Device Manager**. The following Login dialog opens: 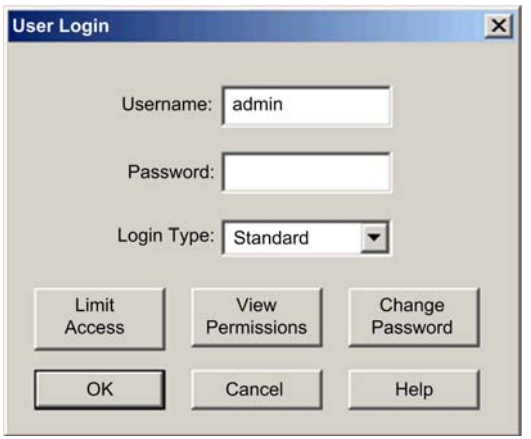
2	Type in your Username/Password combination. **NOTE:** You created the Username/Password combination when you installed the *AMS Device Manager* on your PC.
3	Click **OK**. The *AMS Device Manager* opens: 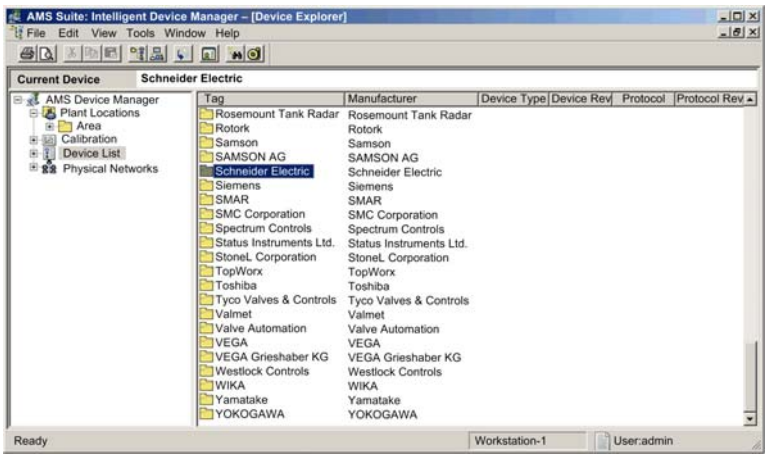
4	Click on the **Device List** node (above) to confirm there is a folder for Schneider Electric. This confirms the Schneider Electric HART multiplexer DD has been added to the AMS device list.

Step	Action
5	Open the **Physical Networks** node to display the new network **Multiplexer Network 1**, then click the right mouse button to display the following menu: 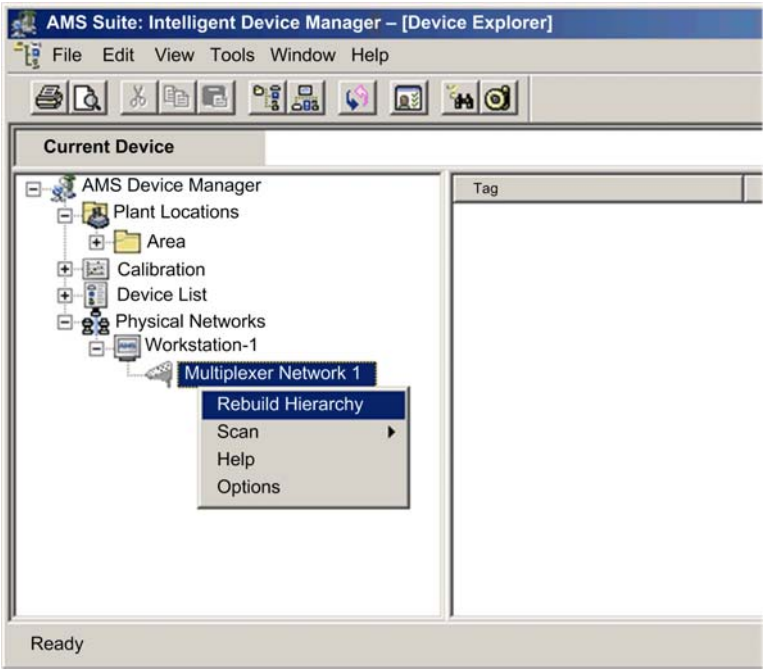
6	Select **Rebuild Hierarchy** (above). The *AMS Device Manager* software searches for HART devices connected to the network. The software adds a new node to the physical network tree when it discovers the Schneider Electric HART multiplexer: 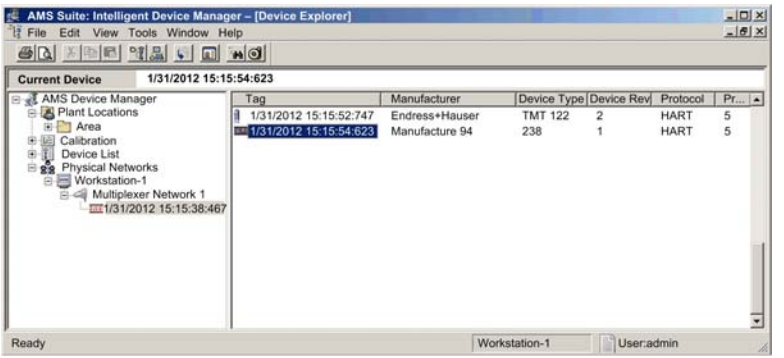

Step	Action
7	Select the new HART multiplexer node in the left pane to display a list of connected HART field instrument in the right pane.
8	You can right click on an item listed in the right pane to display a menu, which you can use to open monitoring, configuration, and diagnostic windows relating to that device. **NOTE:** Consult the documentation provided by the vendor of the device management software and the HART field instruments for instructions on how to work use the software in conjunction with the HART instruments.

Glossary

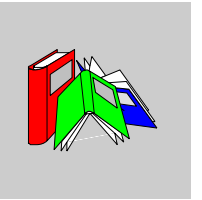

A

analog input

A module that contains circuits that convert analog input signals to digital values that can be manipulated by the processor. By implication, these analog inputs are usually direct. That means a data table value directly reflects the analog signal value.

analog output

A module that contains circuits that transmit an analog signal proportional to a digital value input to the module from the processor. By implication, these analog outputs are usually direct. That means a data table value directly controls the analog signal value.

asset management software

A software application that can configure, monitor, and manage devices employed as part of an industrial automation system.

asynchronous

Communication mode typified by the absence of a global, fixed-rate clock signal. Instead, asynchronous communication control is spread among multiple devices, that communicate and synchronize over shared channels.

auto addressing

The automatic assignment of an address to each island bus I/O module.

auto configuration

The ability of island modules to operate with predefined default parameters. A configuration of the island bus based completely on the actual assembly of I/O modules.

B

basic I/O

Low-cost STB input/output modules that use a fixed set of operating parameters. A basic I/O module cannot be re-configured with the Advantys configuration software, and cannot be used in reflex actions.

basic NIM

A low-cost STB network interface module that supports up to 12 STB I/O modules. A basic NIM does not support the Advantys configuration software, reflex actions, nor the use of an HMI panel.

basic PDM

A low-cost STB PDM that distributes sensor power and actuator power over a single field power bus on the island. The bus provides a maximum of 4 A total power. A basic PDM requires a 5 A fuse to help protect the I/O.

Bell 202 FSK standard

A standard defining the operation of *frequency shift keying:* a frequency modulation scheme that transmits digital information by means of discrete frequency changes in a carrier wave.

BootP

Bootstrap Protocol: A UDP/IP protocol that allows an internet node to obtain its IP parameters based on its MAC address.

BOS

Beginning of Segment: An STB XBE 1300 BOS module is installed in the first position in an extension segment, when the STB island consists of more than one segment. Its job is to carry island bus communications to—and provide logic power for—the modules in the extension segment.

C

configuration

The arrangement and interconnection of hardware components within a system, and the hardware and software settings that determine the operating characteristics of the system.

current loop

An analog electrical signaling scheme, that allows a device to be monitored or controlled over a pair of conductors. Only one current level can exist in a current loop at any point in time. A digital signal can be added to the analog current loop using the HART protocol, enabling additional communication with the analog device.

D

DDL

Device Description Language file: A definitional template for a HART field instrument, that describes its configurable parameters, the data that it can produce, and its operating procedures, including menus, commands and display formats.

device name

A user-defined, unique identifier for an Ethernet NIM. A device name (or *role name*) is created when you combine the upper and lower numeric rotary switch values with the NIM (for example, STBNIP2212_123). After the NIM is configured with a valid device name, a DHCP server can use it to identify the island and provide an IP address to the NIM at power up.

DHCP

Dynamic Host Configuration Protocol. A TCP/IP protocol that allows a server to assign an IP address based on a device name (host name) to a network node.

DIN

Deutsche Industrial Norms. A German agency that sets engineering and dimensional standards and now has worldwide recognition.

DTM

Device Type Manager. A DTM is a software component that acts as a device driver. It contains information for configuring, diagnosing, and maintaining particular field devices. Many manufacturers provide device-specific DTMs, but a generic DTM can be used to drive a wide variety of devices.

E

EIA

Electronic Industries Association: An organization that establishes electrical/electronic and data communication standards.

EMC

electromagnetic compatibility: Devices that meet EMC requirements can operate within a system's expected electromagnetic limits without interruption.

EMI

electromagnetic interference: EMI can cause an interruption or disturbance in the performance of electronic equipment. It occurs when a source electronically transmits a signal that interferes with other equipment. Also known as radio frequency interference (RFI).

EOS

End of Segment: An STB XBE 1100 EOS module is installed in the last position in every segment that has an extension following it, when an island consists of more than 1 segment. The EOS module extends island bus communications to the next segment.

Ethernet

A 10 or 100 Mb/s, CSMA/CD, frame-based LAN that can run over twisted pair or fiber optic cable, or wireless. The IEEE standard 802.3 defines the rules for configuring a wired Ethernet network; the IEEE standard 802.11 defines the rules for configuring a wireless Ethernet network.

F

fallback state

A known state to which an STB I/O module can return in the event that it loses communication with the PLC.

FE

functional ground: A grounded supply conductor, often carrying current, that is used to enhance the operation of equipment. Contrast: *protective ground (PE)*.

Flash memory

Nonvolatile memory that can be overwritten. It is stored on an EEPROM that can be erased and reprogrammed.

H

half duplex

A system of communication that provides for transmissions in both directions, but in only one direction at a time.

HART

Highway Addressable Remote Transducer protocol: A bi-directional communication protocol for transmitting—across analog wires—digital information between intelligent field devices and a host control/monitoring system. For more information, refer to the *HART Communication Foundation* web site: www.hartcomm.org.

HART interface module

A modem that serves as the pass through device between one or more HART master devices, and multiple HART slave devices. In STB the STB AHI 8321 module.

HART master

A HART host application, typically resident in a PC. For example, asset management software.

HART slave

A HART compliant smart field device, which responds via the HART protocol only when commanded to do so by a HART master.

high pass filter

A frequency-based filter that permits transmissions only above a pre-set frequency threshold to pass. In HART, the frequency threshold is typically set in range of 400...800 Hz: transmissions above this threshold—HART digital signals—are allowed to pass through; transmissions beneath this threshold are filtered.

HMI

human-machine interface: An operator interface, usually graphical, used by operators of industrial equipment.

hot swapping

Replacing a component with a like component while the system remains operational. When the replacement component is installed, it begins to function automatically.

I

I/O base

A mounting device, designed to seat an STB I/O module, connect the module to a DIN rail, and connect the module to the island bus. The I/O base provides the connection point where the I/O module can receive power from the input or output power bus distributed by a PDM.

I/O module

In a programmable controller system, an I/O module interfaces directly to the sensors and actuators of the machine/process. This module is the component that mounts in an I/O base and provides electrical connections between the controller and the field devices.

IEC

International Electrotechnical Commission Carrier: Founded in 1884 to focus on advancing the theory and practice of electrical, electronics and computer engineering, and computer science. EN 61131-2 is the specification that deals with industrial automation equipment.

IEEE

Institute of Electrical and Electronics Engineers, Inc.: The international standards and conformity assessment body for all fields of electrotechnology, including electricity and electronics.

IP

Internet Protocol: That part of the TCP/IP protocol family that tracks the internet addresses of nodes, routes outgoing messages, and recognizes incoming messages.

IP rating

ingress protection rating: A standardized approach to establishing the degree to which a device resists the ingress of particles and water, as defined by IEC 60529. For example:

- IP20 requires that a device not permit the ingress and contact of objects larger than 12.5 mm (0.49 in). The standard does not require resistance to ingress by water.
- IP67 requires that a device completely resist the ingress of dust and contact by objects. The standard requires that no Ingress of water in harmful quantity be permitted when the enclosure is immersed in water up to 1 m (39.37 in).

L

low pass filter

A frequency-based filter that permits transmissions only below a pre-set frequency threshold to pass. In HART, the frequency threshold is typically set in range of 25 Hz: transmissions below this threshold—analog signals—are allowed to pass through; transmissions above this threshold—HART digital signals—are filtered.

M

MAC address

Media Access Control address: A 48-bit number, unique on a network, that is programmed into each network card or device when it is manufactured.

mandatory module

An STB I/O module configuration setting that requires the module to be present and healthy in the island configuration, if the island is to remain operational. If a mandatory module is inoperable or is removed from its location on the island bus, the island goes to a pre-operational state. By default, all I/O modules are not mandatory. Use the Advantys configuration software to set this parameter.

Modbus

An application layer messaging protocol. Modbus provides serial communications between master and slave devices connected on different types of buses or networks.

multiplexer

A multiplexer (MUX) is a device that selects one of several input signals and forwards the selected input into a single line. In STB, an island consisting of a HART enabled Ethernet network interface module and from 1 to 8 HART interface modules perform the task of multiplexer.

N

NaN

Not a number: A numeric data type value representing an undefined or unrepresentable value.

NEMA

National Electrical Manufacturers Association

NIM

network interface module: The interface between an island bus and the fieldbus network of which the island is a part. A NIM enables all the I/O on the island to be treated as a single node on the fieldbus. The NIM also provides 5 V of logic power to the STB I/O modules in the same segment as the NIM. The HART multiplexer uses the STB NIP 2311 Ethernet NIM.

P

PDM

power distribution module: A module that distributes either field power to a cluster of input and output modules, located directly to its right, on the island bus. For the HART multiplexer, you can use either the STB PDT 3100 standard NIM, or the STB PDT 3105 basic NIM.

PE

protective ground: An equipment grounding conductor that keeps the exposed conductive surfaces of equipment at earth potential. A PE conductor does not enhance or facilitate the operation of the equipment. Its purpose is to guard the operator against potential electric shock. Contrast: *functional ground (FE)*.

PLC

programmable logic controller: The PLC is a digital computer used for automation of electromechanical processes, such as control of machinery. PLCs are used in many industries and machines. The PLC is designed to:

- communicate via multiple inputs and outputs
- operate in an extended range of temperatures
- perform under conditions that may include dust, water, electrical noise, vibration and impact

Programs to control machine operation are typically stored in non-volatile memory. A PLC is designed to provide highly deterministic performance, within predictable time boundaries.

primary master

In HART, when two master devices are connected to the HART communication network, the HART controller. The HART primary master is typically asset management software resident on a PC.

process image

A part of the NIM firmware that serves as a real-time data area for the data exchange process. The process image includes an input buffer that contains current data and status information from the island bus and an output buffer that contains the current outputs for the island bus, from the fieldbus master.

R

reflex action

A simple, logical command function configured locally on an island bus I/O module. Reflex actions are executed by island bus modules on data from various island locations, like input and output modules or the NIM. Examples of reflex actions include compare and copy operations.

RFI

radio frequency interference: See *EMI*.

S

secondary master

In HART, when two master devices are connected to the HART communication network, a hand-held master device temporarily connected to the network.

segment

A group of interconnected I/O and power modules on an island bus. An island consists of at least 1 segment and, depending on the type of NIM used, may have as many as 7 segments. The first (leftmost) module in a segment needs to provide logic power and island bus communications to the I/O modules on its right. In the primary segment, that function is filled by a NIM. In an extension segment, that function is filled by a BOS module.

SELV

safety extra low voltage: A secondary circuit designed so that the voltage between any 2 accessible parts (or between 1 accessible part and the PE terminal for Class 1 equipment) does not exceed a specified value under normal conditions or under single point of failure conditions. Schneider Electric's Phaseo ABL8 range of power supplies has products that comply with the SELV standard in IEC/EN 60364-4-41.

SIM

subscriber identification module. In STB, configuration data created or modified with the Advantys configuration software can be stored on a SIM (referred to as the "removable memory card") and then written to the NIM's Flash memory.

sink load

An output that, when turned on, receives DC current from its load.

size 1 base

A mounting device, designed to seat an STB module, connect it to a DIN rail, and connect it to the island bus. It is 13.9 mm (0.55 in.) wide and 128.25 mm (5.05 in.) high.

size 2 base

A mounting device, designed to seat an STB module, connect it to a DIN rail, and connect it to the island bus. It is 18.4 mm (0.73 in.) wide and 128.25 mm (5.05 in.) high.

size 3 base

A mounting device, designed to seat an STB module, connect it to a DIN rail, and connect it to the island bus. It is 28.1 mm (1.11 in.) wide and 128.25 mm (5.05 in.) high.

source load

A load with a current directed into its input; it is driven by a current source.

standard I/O

Any of a subset of STB input/output modules designed at a moderate cost to operate with user-configurable parameters. A standard I/O module may be reconfigured with the Advantys configuration software, and may be used in reflex actions.

standard NIM

An STB network interface module designed at moderate cost to support the configuration capabilities, multi-segment design and throughput capacity suitable for many standard applications on the island bus. An island run by a standard NIM can support up to 32 addressable I/O modules. The HART multiplexer uses the STB NIP 2311 standard NIM.

standard PDM

A standard PDM (power distribution module) is an STB module that distributes sensor power to the input modules and actuator power to the output modules over two separate power buses on the island. The bus provides a maximum of 4 A to the input modules and 8 A to the output modules. A standard PDM requires a 5 A fuse to help protect the input modules and an 8 A fuse to help protect the outputs. The HART multiplexer supports the use of the STB PDT 3100 standard PDM.

T

TCP

transmission control protocol:. A connection-oriented transport layer protocol that provides full-duplex data transmission. TCP is part of the TCP/IP suite of protocols.

Index

F

G

H

I

L

M

N

O

P

Q

R

DNP3 Device Profile

Based on DNP XML Schema version 2.11.00

Document Name: SCADAPack 57x RTU DNP3 Outstation Capabilities XML Device Profile

Document Description: Outstation Capabilities Device Profile for Schneider Electric SCADAPack 570, SCADAPack 574 and SCADAPack 575 RTU

Revision History

Date	Time	Version	Reason for change	Edited by
2016-11-30		1	Initial Revision	Metin Ozturk
2017-06-22		2	Updated device profile to DNP XML Schema v2.11.00 (2016); editorial corrections; current (default) value updates; 1.1.10 configuration software name (SCADAPack x70 RemoteConnect); 1.1.12 XML file name; 1.2 port names updated; 1.2.4 hardware flow control updates; 1.3.1 port names updated; 1.9.7 default setting moved to 1.9.8; 1.9.10 clarified unsol delay param; 3.7.6 current value moved to capabilities; 4. removed g113 unsol; 5.1-5.6 updated notes and point example min/max and descriptions; 5.7 filename DEVICEDIAG.LOG; 5.8 add string group numbers, removed config strings, renamed system strings; 5.9 removed DNP VT serial ports	Philip Aubin

Date	Time	Version	Reason for change	Edited by
2017-07-13		3	Updated g80v1 Slave parsed request to show Index 7 DEVICE_RESTART; Added g80v1 Slave parsed request for Index 4 NEED_TIME; updated device profile, firmware and hardware version numbers	Philip Aubin
2017-11-09		4	Updated 1.3.6 Added TCP/UDP connection limits based on list of IP addresses or list of wildcard IP addresses now supported with IP Whitelist; Updated 1.3.16 to correct IP Multi-master to remove Model 2 (based on IP Port number) that is not fully supported; 1.1.3 added SCADAPack 574 support; updated 1.5.2 to "Same as 1.5.1"; software tool added where missing for configurable fields	Philip Aubin
2018-04-12		5	1.1.5 Updated firmware string name; 1.1.6 Updated device profile document version number; 4 added g0v203, g0v204. g0v205 device location attributes; 5 Removed all notes regarding point index limitations 0 to 49999 and system points 50000 to 65535; 5.7 Added SYS_* reserved system files, Added Logic\TEST.LOG logic operational log file; 5.8 Changed Octet String objects "Fixed" to "Configurable"; 5.8 Replaced all fixed octet string points from the table with an example configured string	Philip Aubin
2018-07-31		6	1.1.9 and 4. Removed g10v1 write not supported; 1.7.3 Device Trouble IIN1.6 activated by System Clock alert; 1.7.4 File Handle Timeout default 60s; 5.7 added file name definition for SCADAPackInfo*.txt	Philip Aubin
2018-09-04		7	1.7.3 Added to Trouble IIN reasons: Memory Battery Voltage Low; 4. Removed g70v6 invalid support for FC 1 (Read) / Qual 5B; 4. Added Function Code 0 (No object) to Implementation Table as per IEEE 1815-2012 interoperability table	Philip Aubin
2019-08-01		8	1.2.4 clarified hardware flow control and RS485 ports; 1.2.6,1.4.6,1.4.7 added "None" options valid for SCADAPack; 1.5.5,1.5.6 maximum objects in a control request limited by fragment; 1.12.1 add missing current value SA version; 4.	Philip Aubin

Date	Time	Version	Reason for change	Edited by
			removed responses for g0 writes, added g0v203,204,205 writes; 1.1.9,4. g70v1 legacy file transfer removed; 5. updated point list examples; 5.3 clarified CROB activation model; 5.7 updated supported file names; 1.1.9 and 5.8 octet string objects not presently supported	
2020-12-21		9	1.1.4,1.1.5,1.1.10 updated version information; 1.8.3 clarified Unsol Response Confirm Timeout is the same as Application Layer Confirm Timeout; 1.8.4 documented unsol retry burst mode; 1.12.1 documented DNP-SA config method via USB stick or Geo SCADA Expert; 1.12.16 documented firmware modification as critical fragments	Philip Aubin

REFERENCE DEVICE:

1 Device Properties

This document is intended to be used for several purposes, including:

- Identifying the capabilities of a DNP3 device (Master Station or Outstation)

- Recording the settings of a specific instance of a device (parameter settings for a specific instance of the device in the user's total DNP3 estate)

- Matching user requirements to product capabilities when procuring a DNP3 device

The document is therefore structured to show, for each technical feature, the capabilities of the device (or capabilities required by the device when procuring).

It is also structured to show the current value (or setting) of each of the parameters that describe a specific instance of the device. This "current value" may also show a functional limitation of the device. For example when implementing secure authentication it is not required that all DNP3 devices accept aggressive mode requests during critical exchanges (see Device Profile 1.12.4), in which case a vendor would mark this current value as "No - does not accept aggressive mode requests".

Additionally, the current value may sometimes be used to show a value that a device can achieve because of hardware or software dependencies. Users should note that if an entry in

the capabilities column of the Device Profile is grayed-out then there may be information in the current value column that is pertinent to the device's capabilities.

Unless otherwise noted, multiple boxes in the second column below are selected for each parameter to indicate all capabilities supported or required. Parameters without checkboxes in the second column do not have capabilities and are included so that the current value may be shown in the third column.

The items listed in the capabilities column below may be configurable to any of the options selected, or set to a fixed value when the device was designed. Item 1.1.10 contains a list of abbreviations for the possible ways in which the configurable parameters may be set. Since some parameters may not be accessible by each of these methods supported, an abbreviation for the configuration method supported by each parameter is shown in the fourth column of the tables below.

If this document is used to show the current values, the third column should be filled in even if a fixed parameter is selected in the capabilities section ("N/A" may be entered for parameters that are Not Applicable).

If the document is used to show the current values of parameters, then column 3 applies to a single connection between a master and an outstation.

1.1 DEVICE IDENTIFICATION	**Capabilities**	**Current Value**	**If configurable list methods**
1.1.1 Device Function: *Masters send DNP requests, while Outstations send DNP responses. If a single physical device can perform both functions, a separate Device Profile Document must be provided for each function.*	○ Master ◉ Outstation	○ Master ◉ Outstation	
1.1.2 Vendor Name: *The name of the organization producing the device.*		Schneider Electric	

Note: The current value of this outstation parameter is available remotely using protocol object Group 0 Variation 252.			
1.1.3 Device Name: *The model and name of the device, sufficient to distinguish it from any other device from the same organization.* *Note: The current value of this outstation parameter is available remotely using protocol object Group 0 Variation 250.*		SCADAPack 570; SCADAPack 574; SCADAPack 575	
1.1.4 Device manufacturer's hardware version string: *Note: The current value of this outstation parameter is available remotely using protocol object Group 0 Variation 243.*		5.0	
1.1.5 Device manufacturer's software version string:		SCADAPack x70 Firmware R2.5.1 (9.5.1)	

Note: The current value of this outstation parameter is available remotely using protocol object Group 0 Variation 242.			
1.1.6 Device Profile Document Version Number: *Version of the Device Profile Document is indicated by a whole number incremented with each new release. This should match the latest version shown in the Revision History at the beginning of this document.*		9	
1.1.7 DNP Levels Supported for: *Indicate each DNP3 Level to which the device conforms fully. For Masters, requests and responses can be indicated independently.*	Outstations Only Requests and Responses ☐ None ☑ Level 1 ☑ Level 2 ☑ Level 3 ☑ Level 4	Level 4	
1.1.8 Supported Function Blocks:	☐ Self Address Support ☐ Data Sets ☑ File Transfer ☑ Virtual Terminal ☐ Mapping to IEC 61850 Object Models defined in a DNP3 XML file	File Transfer Virtual Terminal FC31	

	☑ Function code 31, activate configuration ☑ Secure Authentication (if checked then see 1.12)		
1.1.9 Notable Additions: *A brief description intended to quickly identify (for the reader) the most obvious features the device supports in addition to the Highest DNP Level Supported. The complete list of features is described in the Implementation Table.*	Function Code 14 Warm Restart Function Code 15 Initialize Counter Data - Legacy Group 22 Var 5 32-bit Counter Change Event with Time Group 22 Var 6 16-bit Counter Change Event with Time Group 70 Var 2-7 File Transfer Group 112 Virtual Terminal Output Block Group 113 Virtual Terminal Event Data		
1.1.10 Methods to set Configurable Parameters:	☐ XML - Loaded via DNP3 File Transfer ☐ XML - Loaded via other transport mechanism ☐ Terminal - ASCII Terminal Command Line ☑ Software - Vendor software named SCADAPack x70 RemoteConnect R2.5.1 (3.8.1) ☑ Software - Vendor software named EcoStruxure Geo SCADA Expert 2019 and later ☑ Proprietary file loaded via DNP3 File Transfer ☑ Proprietary file loaded via other transport mechanism ☐ Direct - Keypad on device front panel ☐ Factory - Specified when device is ordered ☑ Protocol - Set via DNP3 (e.g. assign class) ☐ Other - explain:		

1.1.11 DNP3 XML files available On-line: *XML configuration file names that can be read or written through DNP3 File Transfer to a device.* *A device's currently running configuration is returned by DNP3 on-line XML file read from the device.* *DNP3 on-line XML file write to a device will update the device's configuration when the Activate Configuration (function code 31) is received.*	Rd Wr Filename ☐ dnpDP.xml ☐ dnpDPCap.xml ☑ dnpDPCfg.xml	Description of Contents Complete Device Profile Device Profile Capabilities Device Profile config values	Rd Wr Filename ☐ dnpDP.xml ☐ dnpDPCap.xml ☑ dnpDPCfg.xml	
1.1.12 External DNP3 XML files available Off-line: *XML configuration file names that can be read or written from an external system, typically from a system that maintains the outstation configuration.*	Rd Wr Filename ☐ ☐ dnpDP.xml ☐ ☐ dnpDPCap.xml ☐ ☐ dnpDPCfg.xml ☑ ☐ "SCADAPack57x Slave.xml"	Description of Contents Complete Device Profile Device Profile Capabilities Device Profile config values Complete Device Profile Document	Rd Wr Filename ☐ ☐ dnpDP.xml ☐ ☐ dnpDPCap.xml ☐ ☐ dnpDPCfg.xml	

External off-line XML file read permits an XML definition of a new configuration to be supplied from off-line configuration tools. *External off-line XML file write permits an XML definition of a new configuration to be supplied to off-line configuration tools.*			
1.1.13 Connections Supported:	☑ Serial (complete section 1.2) ☑ IP Networking (complete section 1.3) ☑ Other, explain **USB (RNDIS)**		

1.2 SERIAL CONNECTIONS	**Capabilities**	**Current Value**	**If configurable list methods**
1.2.1 Port Name: *Name used to reference the communications port defined in this section.*		Serial1, Serial2, Serial3, Serial4	
1.2.2 Serial Connection Parameters:	☑ Asynchronous - 8 Data Bits, 1 Start Bit, 1 Stop Bit, No Parity ☑ Other, explain **The port can also be configured to use: 8 bits ODD Parity, 8 bits EVEN parity, 8 bits No Parity 2 STOP Bits**		software **SCADAPack x70 RemoteConnect** ----------
1.2.3 Baud Rate:	☐ Fixed at ☐ Configurable, range to ☑ Configurable, selectable from **300**, **600**, **1200**, **2400**, **4800**, **9600**, **19200**, **38400**,	9600 Note: This is the default setting	software **SCADAPack x70 RemoteConnect** ----------

	57600, **115200** ☐ Configurable, other, describe		
1.2.4 Hardware Flow Control (Handshaking): *Describe hardware signaling requirements of the interface.* *Where a transmitter or receiver is inhibited until a given control signal is asserted, it is considered to require that signal prior to sending or receiving characters.* *Where a signal is asserted prior to transmitting, that signal will be maintained active until after the end of transmission.* *Where a signal is asserted to enable reception, any data sent to the device when the signal is not active could be discarded.*	☑ None **RS-232 / V.24 / V.28 Options:** Asserts: ☑ RTS Before Tx ☐ DTR Before Tx ☐ RTS Before Rx ☐ DTR Before Rx ☑ Always RTS ☐ Always DTR Requires Before Tx: CTS ☐ Asserted ☐ Deasserted DCD ☐ Asserted ☐ Deasserted DSR ☐ Asserted ☐ Deasserted RI ☐ Asserted ☐ Deasserted ☐ Requires Rx Inactive before Tx Requires Before Rx: CTS ☐ Asserted ☐ Deasserted DCD ☐ Asserted ☐ Deasserted DSR ☐ Asserted ☐ Deasserted RI ☐ Asserted ☐ Deasserted Always Ignores: ☐ CTS ☐ DCD ☑ DSR ☑ RI ☐ Other, explain **RS-485 Options:** ☑ Requires Rx inactive before Tx ☐ Other, explain	None Note: This is the default setting	software **SCADAPack x70 RemoteConnect** ----------

	Note: Hardware Flow Control is configurable on Serial1, Serial2. See device documentation for available modes Note: RS485 is configurable on Serial3, Serial4		
1.2.5 Interval to Request Link Status: *Indicates how often to send Data Link Layer status requests on a serial connection. This parameter is separate from the TCP Keep-alive timer.*	☑ Not Supported ☐ Fixed at seconds ☐ Configurable, range to seconds ☐ Configurable, selectable from seconds ☐ Configurable, other, describe	Not Supported	
1.2.6 Supports DNP3 Collision Avoidance: *Indicates whether an Outstation uses a collision avoidance algorithm.* *Collision avoidance may be implemented by a back-off timer with two parameters that define the back-off time range or by some other vendor-specific mechanism.* *The recommended back-off time is specified as being a fixed minimum delay plus a random delay, where the random delay has a maximum value specified. This defines a range of delay times that are randomly distributed between the minimum value and the minimum plus the maximum of the random value.* *If a back-off timer is implemented with only a*	☑ No ☑ Yes, using Back-off time = (Min + Random) method Minimum Back-off time: ☐ Fixed at ms ☑ Configurable, range **0** to **65535**ms ☐ Configurable, selectable from ms ☐ Configurable, other, describe Maximum Random Back-off time component: ☐ Fixed at ms ☑ Configurable, range **0** to **65535**ms ☐ Configurable, selectable from ms ☐ Configurable, other, describe	No Note: This is the default setting	software **SCADAPack x70 RemoteConnect** ----------

fixed or only a random value, select the Back-off time method and set the parameter that is not supported to "Fixed at 0 ms".	☑ Other, explain **Via the RS232 CTS signal (when configured)**		
1.2.7 Receiver Inter-character Timeout: *When serial interfaces with asynchronous character framing are used, this parameter indicates if the receiver makes a check for gaps between characters. (i.e. extensions of the stop bit time of one character prior to the start bit of the following character within a message). If the receiver performs this check and the timeout is exceeded then the receiver discards the current data link frame. A receiver that does not discard data link frames on the basis of inter-character gaps is considered not to perform this check.* *Where no asynchronous serial interface is fitted this parameter is not applicable. In this case none of the options shall be selected.*	☑ Not Checked ☐ No gap permitted ☐ Fixed at bit times ☐ Fixed at ms ☐ Configurable, range to bit times ☐ Configurable, range to ms ☐ Configurable, selectable from bit times ☐ Configurable, selectable from ms ☐ Configurable, other, describe ☐ Variable, explain	Not Checked	
1.2.8 Inter-character gaps in transmission: *When serial interfaces with asynchronous character framing are used, this parameter indicates whether extra delay is ever introduced between characters in the message, and if so, the maximum width of the gap.*	☐ None (always transmits with no inter-character gap) ☐ Maximumbit times ☑ Maximum**1**ms	1 ms	

Where no asynchronous serial interface is fitted this parameter is not applicable. In this case none of the options shall be selected.			

1.3 IP NETWORKING	**Capabilities**	**Current Value**	**If configurable list methods**
1.3.1 Port Name: *Name used to reference the communications port defined in this section.*		Eth1, Eth2, Eth3, Serial1 (PPP/TCPIP), Serial2 (PPP/TCPIP)	
1.3.2 Type of End Point:	☐ TCP Initiating ☑ TCP Listening ☑ TCP Dual ☑ UDP Datagram		software **SCADAPack x70 RemoteConnect** ----------
1.3.3 IP Address of this Device:		172.16.1.200 Note: This is the default setting for Eth1	software **SCADAPack x70 RemoteConnect** ----------
1.3.4 Subnet Mask:		255.255.255.0 Note: This is the default setting for Eth1	software **SCADAPack x70 RemoteConnect** ----------
1.3.5 Gateway IP Address:			software **SCADAPack x70 RemoteConnect** ----------
1.3.6 Accepts TCP Connections or UDP Datagrams from:	☑ Allows all (show as *.*.*.* in 1.3.7) ☐ Limits based on IP address ☑ Limits based on list of IP addresses ☐ Limits based on a	Allows all Note: This is the default setting	software **SCADAPack x70 RemoteConnect** ----------

	wildcard IP address ☑ Limits based on list of wildcard IP addresses ☐ Other, explain		
1.3.7 IP Address(es) from which TCP Connections or UDP Datagrams are accepted:		*.*.*.*	
1.3.8 TCP Listen Port Number: *If Outstation or dual end point Master, port number on which to listen for incoming TCP connect requests. Required to be configureable for Masters and recommended to be configurable for Outstations.*	☐ Not Applicable (Master w/o dual end point) ☐ Fixed at 20,000 ☑ Configurable, range **0** to **65535** ☐ Configurable, selectable from ☐ Configurable, other, describe	20000 Note: This is the default setting	software **SCADAPack x70 RemoteConnect** ----------
1.3.9 TCP Listen Port Number of remote device: *If Master or dual end point Outstation, port number on remote device with which to initiate connection. Required to be configurable for Masters and recommended to be configurable for Outstations.*	☐ Not Applicable (Outstation w/o dual end point) ☐ Fixed at 20,000 ☑ Configurable, range **0** to **65535** ☐ Configurable, selectable from ☐ Configurable, other, describe	20000 Note: This is the default setting	software **SCADAPack x70 RemoteConnect** ----------
1.3.10 TCP Keep-alive timer: *The time period for the keep-alive timer on active TCP connections.*	☐ Timer Disabled ☐ Fixed at ms ☑ Configurable, range **0** to **65535000**ms ☐ Configurable, selectable from ms ☐ Configurable, other, describe Note: This is configurable in units of seconds	1150000 ms Note: This is the default setting	software **SCADAPack x70 RemoteConnect** ----------
1.3.11 Local UDP port: *Local UDP port for sending and/or receiving*	☐ Fixed at 20,000 ☑ Configurable, range **0** to **65535**	20000 Note: Same as 1.3.8	software **SCADAPack x70**

UDP datagrams. Masters may let system choose an available port. Outstations must use one that is known by the Master.	☐ Configurable, selectable from ☐Configurable, other, describe ☐Let system choose (Master only)	Listen Port Setting. This is the default setting	**RemoteConnect** ----------
1.3.12 Destination UDP port for DNP3 Requests (Masters Only):	☐ Fixed at 20,000 ☐ Configurable, range to ☐ Configurable, selectable from ☐Configurable, other, describe Note: Not applicable		
1.3.13 Destination UDP port for initial unsolicited null responses (UDP only Outstations): *The destination UDP port for sending initial unsolicited Null response.*	☐ None ☐ Fixed at 20,000 ☐ Configurable, range to ☐ Configurable, selectable from ☐Configurable, other, describe Note: Not applicable		
1.3.14 Destination UDP port for responses (UDP only Outstations): *The destination UDP port for sending all responses other than the initial unsolicited Null response.*	☐ None ☐ Fixed at 20,000 ☐ Configurable, range to ☐ Configurable, selectable from ☐Configurable, other, describe ☐Use local port number (as specified in 1.3.11) Note: Not applicable		
1.3.15 Multiple outstation connections (Masters only): *Indicates whether multiple outstation connections are supported.*	☐ Supports multiple outstations (Masters only) Note: Not applicable		
1.3.16 Multiple master connections (Outstations only):	☑ Supports multiple masters (Outstations only) If supported, the following methods may be used:		software **SCADAPack x70 RemoteConnect**

Indicates whether multiple master connections are supported and the method that can be used to establish connections.	☑ Method 1 (based on IP address) - required ☐ Method 2 (based on IP port number) - recommended ☑ Method 3 (browsing for static data) - optional		----------
1.3.17 Time synchronization support:	☑ DNP3 LAN procedure (function code 24) ☑ DNP3 Write Time (not recommended over LAN) ☐ Other, explain ☐ Not Supported		

1.4 LINK LAYER	**Capabilities**	**Current Value**	**If configurable list methods**
1.4.1 Data Link Address: *Indicates if the link address is configurable over the entire valid range of 0 to 65,519. Data link addresses 0xFFF0 through 0xFFFF are reserved for broadcast or other special purposes.*	☐ Fixed at ☑ Configurable, range **0** to **65519** ☐ Configurable, selectable from ☐ Configurable, other, describe	0 Note: This is the default setting	software **SCADAPack x70 RemoteConnect** ----------
1.4.2 DNP3 Source Address Validation: *Indicates whether the Outstation will filter out requests not from a specific source address.*	☑ Never ☐ Always, one address allowed (shown in 1.4.3) ☐ Always, any one of multiple addresses allowed (each selectable as shown in 1.4.3) ☐ Sometimes, explain	Never	
1.4.3 DNP3 Source Address (es) expected when Validation is Enabled: *Selects the allowed source address(es)*	☐ Configurable to any 16 bit DNP Data Link Address value ☐ Configurable, range to ☐ Configurable, selectable from ☐ Configurable, other, describe Note: Not applicable		

1.4.4 Self Address Support using address 0xFFFC: *If an Outstation receives a message with a destination address of 0xFFFC it shall respond normally with its own source address. It must be possible to diasble this feature if supported.*	☐ Yes (only allowed if configurable) ☑ No	No	
1.4.5 Sends Confirmed User Data Frames: *A list of conditions under which the device transmits confirmed link layer services (TEST_LINK_STATES, RESET_LINK_STATES, CONFIRMED_USER_DATA).*	☑ Never ☑ Always ☑ Sometimes, explain **On multi-frame responses**	Never Note: This is the default setting	software **SCADAPack x70 RemoteConnect** ----------
1.4.6 Data Link Layer Confirmation Timeout: *This timeout applies to any secondary data link message that requires a confirm or response (link reset, link status, user data, etc).*	☑ None ☐ Fixed at ms ☑ Configurable, range **0** to **65535000**ms ☐ Configurable, selectable from ms ☐ Configurable, other, describe ☐ Variable, explain Note: This is configurable in units of seconds	None Note: This is the default setting	software **SCADAPack x70 RemoteConnect** ----------
1.4.7 Maximum Data Link Retries: *The number of times the device will retransmit a frame that requests Link Layer confirmation.*	☑ None ☐ Fixed at ☑ Configurable, range **0** to **65535** ☐ Configurable, selectable from ☐ Configurable, other, describe	None Note: This is the default setting	software **SCADAPack x70 RemoteConnect** ----------
1.4.8 Maximum number of octets Transmitted in a Data Link Frame: *This number includes the CRCs. With a length field of*	☐ Fixed at ☑ Configurable, range **14** to **292** ☐ Configurable, selectable from ☐ Configurable, other, describe	292 Note: This is the default setting	software **SCADAPack x70 RemoteConnect** ----------

255, the maximum size would be 292.			
1.4.9 Maximum number of octets that can be Received in a Data Link Frame: *This number includes the CRCs. With a field length of 255, the maximum size would be 292. The device must be able to receive 292 octets to be compliant.*	☑ Fixed at **292** ☐ Configurable, range to ☐ Configurable, selectable from ☐ Configurable, other, describe	292	

1.5 APPLICATION LAYER	**Capabilities**	**Current Value**	**If configurable list methods**
1.5.1 Maximum number of octets Transmitted in an Application Layer Fragment other than File Transfer: *This size does not include any transport or frame octets.* *- Masters must provide a setting less than or equal to 249 to be compliant.* *- Outstations must provide a setting less than or equal to 2048 to be compliant.* *Note: The current value of this outstation parameter is available remotely using protocol object Group 0 Variation 240.*	☐ Fixed at ☑ Configurable, range **1** to **2048** ☐ Configurable, selectable from ☐ Configurable, other, describe	2048 Note: This is the default setting	software **SCADAPack x70 RemoteConnect** ----------
1.5.2 Maximum number of octets Transmitted in an Application Layer Fragment containing File Transfer:	☑ Same as 1.5.1 ☐ Fixed at ☐ Configurable, range to ☐ Configurable, selectable from ☐ Configurable, other, describe		
1.5.3 Maximum number of octets that can be received in an Application Layer Fragment:	☑ Fixed at **2048** ☐ Configurable, range to ☐ Configurable, selectable from	2048	

This size does not include any transport or frame octets. *- Masters must provide a setting greater than or equal to 2048 to be compliant.* *- Outstations must provide a setting greater than or equal to 249 to be compliant.* *Note: The current value of this outstation parameter is available remotely using protocol object Group 0 Variation 241.*	☐ Configurable, other, describe		
1.5.4 Timeout waiting for Complete Application Layer Fragment: *Timeout if all frames of a message fragment are not received in the specified time. Measured from time first frame of a fragment is received until the last frame is received.*	☐ None ☐ Fixed at ms ☑ Configurable, range **0** to **65535000**ms ☐ Configurable, selectable from ms ☐ Configurable, other, describe ☐ Variable, explain Note: This is configurable in units of seconds	24000ms Note: This is the default setting	software **SCADAPack x70 RemoteConnect** ----------
1.5.5 Maximum number of objects allowed in a single control request for CROB (Group 12): *Note: The current value of this outstation parameter is available remotely using protocol object Group 0 Variation 216.*	☐ Fixed at (enter 0 if controls are not supported for CROB) ☐ Configurable, range to ☐ Configurable, selectable from ☐ Configurable, other, describe ☐ Variable, explain ☑ The number of objects that can be contained in a fragment (as specified in 1.5.3)	Number of objects in a fragment	
1.5.6 Maximum number of objects allowed in a single control request for Analog Outputs (Group 41):	☐ Fixed at (enter 0 if controls are not supported for Analog Outputs) ☐ Configurable, range to ☐ Configurable, selectable	Number of objects in a fragment	

	from ☐ Configurable, other, describe ☐ Variable, explain ☑ The number of objects that can be contained in a fragment (as specified in 1.5.3)		
1.5.7 Maximum number of objects allowed in a single control request for Data Sets (Groups 85, 86, 87):	☑ Fixed at **0**(enter 0 if controls are not supported for Data Sets) ☐ Configurable, range to ☐ Configurable, selectable from ☐ Configurable, other, describe ☐ Variable, explain ☐ The number of objects that can be contained in a fragment (as specified in 1.5.3)		
1.5.8 Supports mixed object groups (AOBs, CROBs and Data Sets) in the same control request:	☐ Not applicable - controls are not supported ☑ Yes ☐ No	Yes	

1.6 Fill Out The Following Items For Masters Only	**Capabilities**	**Current Value**	**If configurable list methods**

1.7 Fill Out The Following Items For Outstations Only	**Capabilities**	**Current Value**	**If configurable list methods**
1.7.1 Timeout waiting for Application Confirm of solicited response message:	☐ None ☐ Fixed at ms ☑ Configurable, range **0** to **65535000**ms ☐ Configurable, selectable from ms ☐ Configurable, other, describe ☐ Variable, explain Note: This is configurable in units of seconds	24000ms Note: This is the default setting	software **SCADAPack x70 RemoteConnect** ----------

1.7.2 How often is time synchronization required from the master: *Details of when the master needs to perform a time synchronization to ensure that the outstation clock does not drift outside of an acceptable tolerance. If the option to relate this to IIN1.4 is used then details of when IIN1.4 is asserted are in section 1.10.2.*	☐ Never needs time ☑ Within **60** seconds after IIN1.4 is set ☐ Periodically, fixed at seconds ☐ Periodically, between and seconds	Within 60 seconds of IIN1.4	
1.7.3 Device Trouble Bit IIN1.6: *If IIN1.6 device trouble bit is set under certain conditions, explain the possible causes.*	☐ Never used ☑ Reason for setting Note: System Clock alert. Time stamps are reporting from Jan 1, 1970 Note: Memory Battery Voltage low. Battery should be replaced		
1.7.4 File Handle Timeout: *If there is no activity referencing a file handle for a configurable length of time, the outstation must do an automatic close on the file. The timeout value must be configurable up to 1 hour. When this condition occurs the outstation will send a File Transport Status Object (obj grp 70 var 6) using a status code value of handle expired (0x02).*	☐ Not applicable, files not supported ☐ Fixed at ms ☑ Configurable, range **5000** to **3600000**ms ☐ Configurable, selectable from ms ☐ Configurable, other, describe ☐ Variable, explain Note: This is configurable in units of seconds	60000 ms Note: This is the default setting	software **SCADAPack x70 RemoteConnect** ----------
1.7.5 Event Buffer Overflow Behavior:	☑ Discard the oldest event ☐ Discard the newest event ☐ Other, explain	Discard oldest	
1.7.6 Event Buffer Organization:		Single buffer: 5000	software **SCADAPack**

Explain how event buffers are arranged (per Object Group, per Class, single buffer, etc) and specify the number of events that can be buffered.	☐ Per Object Group (see part 3) ☐ Per Class Class 1: ☐ Fixed at ☐ Configurable, range to ☐ Configurable, selectable from ☐ Configurable, other, describe Class 2: ☐ Fixed at ☐ Configurable, range to ☐ Configurable, selectable from ☐ Configurable, other, describe Class 3: ☐ Fixed at ☐ Configurable, range to ☐ Configurable, selectable from ☐ Configurable, other, describe ☑ Single Buffer ☐ Fixed at ☑ Configurable, range **0** to **40000** ☐ Configurable, selectable from ☐ Configurable, other, describe ☐ Other, describe	Note: This is the default setting	**x70 RemoteConnect** ----------
1.7.7 Sends Multi-Fragment Responses: *Indicates whether an Outstation sends multi-fragment responses*	☑ Yes ☐ No	Yes	

(Masters do not send multi-fragment requests).			
1.7.8 Last Fragment Confirmation: *Indicates whether the Outstation requests confirmation of the last fragment of a multi-fragment response.*	☐ Always ☑ Sometimes, explain **Only when it contains events** ☐ Never	Sometimes	
1.7.9 DNP Command Settings preserved through a device restart: *If any of these settings are written through the DNP protocol and they are not preserved through a restart of the Outstation, the Master will have to write them again after it receives a response in which the Restart IIN bit is set.*	☑ Assign Class ☑ Analog Deadbands ☐ Data Set Prototypes ☐ Data Set Descriptors ☑ Function Code 31 Activate Configuration		
1.7.10 Supports configuration signature: *Indicates whether an Outstation supports the Group 0 device attribute "Configuration signature" (variation 200). If yes, list the vendor-defined name(s) of the algorithm(s) available to calculate the signature.* *Note: The algorithm used for calculating the signature is identified by name in a string that can be determined remotely using protocol object Group 0 Variation 201. If only a single algorithm is available, identifying that algorithm in this object is optional.*	☐ Configuration signature supported If configuration signature is supported, then the following algorithm(s) are available for calculating the signature:	Not Supported	

1.7.11 Requests Application Confirmation: *Indicate if application confirmation is requested:* *- when responding with events* *- when sending non-final fragments of multi-fragment responses* *Note: to be compliant both must be selected as "yes".*	For event responses: ◉ Yes ○ No ○ Configurable For non-final fragments: ◉ Yes ○ No ○ Configurable	Event responses: Yes Non-final fragments: Yes	
1.7.12 Supports DNP3 Clock Management: *Indicates whether the Outstation supports the DNP3 clock management functionality:* *- supports timestamped object variations required for its subset level with a time accuracy that is consistent with section 10 of this Device Profile* *- if the outstation asserts IIN1.4 [NEED_TIME], it shall support DNP3 time synchronization functionality*	☑ Yes ☐ No	Yes	

1.8 OUTSTATION UNSOLICITED RESPONSE SUPPORT	**Capabilities**	**Current Value**	**If configurable list methods**
1.8.1 Supports Unsolicited Reporting: *When the unsolicited response mode is configured "off", the device is to behave exactly like an equivalent device that has no support for unsolicited responses. If set to "on", the Outstation will send a*	☐ Yes ☐ No ☑ Configurable, selectable from On and Off	Off Note: This is the default setting	software **SCADAPack x70 RemoteConnect** ----------

null Unsolicited Response after it restarts, then wait for an Enable Unsolicited Response command from the master before sending additional Unsolicited Responses containing event data.			
1.8.2 Master Data Link Address: *The destination address of the master device where the unsolicited responses will be sent.*	☐ Fixed at ☑ Configurable, range **0** to **65519** ☐ Configurable, selectable from ☐ Configurable, other, describe	30000 Note: This is the default setting	software **SCADAPack x70 RemoteConnect** ----------
1.8.3 Unsolicited Response Confirmation Timeout: *This is the amount of time that the outstation will wait for an Application Layer confirmation back from the master indicating that the master received the unsolicited response message. As a minimum, the range of configurable values must include times from one second to one minute. This parameter may be the same one that is used for normal, solicited, application confirmation timeouts, or it may be a separate parameter.*	☐ Fixed at ms ☑ Configurable, range **1000** to **65535000**ms ☐ Configurable, selectable from ms ☐ Configurable, other, describe ☐ Variable, explain Note: Configurable in units of seconds Note: same as Connection to Master Station > Event Transmission Setup - Application Layer Confirm Timeout	16000 ms Note: This is the default setting	software **SCADAPack x70 RemoteConnect** ----------
1.8.4 Number of Unsolicited Retries: *This is the number of retries that an outstation transmits in each unsolicited response series if it does not receive confirmation back from the master. The configured value includes identical and regenerated retry*	☐ None ☐ Fixed at ☐ Configurable, range to ☐ Configurable, selectable from ☑ Configurable, other, describe **- repeating pattern of Unsolicited Attempts per burst (separated by Application Layer Confirm Timeout)**	Unlimited	

messages. One of the choices must provide for an indefinite (and potentially infinite) number of transmissions.	**followed by Quiet Time Delay** ☑ Unlimited		

1.9 OUTSTATION UNSOLICITED RESPONSE TRIGGER CONDITIONS	**Capabilities**	**Current Value**	**If configurable list methods**
1.9.1 Number of class 1 events:	☑ Class 1 not used to trigger Unsolicited Responses ☐ Fixed at ☑ Configurable, range **0** to **65535** ☐ Configurable, selectable from ☐ Configurable, other, describe Note: Configuring the number to 0 stops class 1 events being used as a trigger	250 Note: This is the default setting	software **SCADAPack x70 RemoteConnect** ----------
1.9.2 Number of class 2 events:	☑ Class 2 not used to trigger Unsolicited Responses ☐ Fixed at ☑ Configurable, range **0** to **65535** ☐ Configurable, selectable from ☐ Configurable, other, describe Note: Configuring the number to 0 stops class 2 events being used as a trigger	250 Note: This is the default setting	software **SCADAPack x70 RemoteConnect** ----------
1.9.3 Number of class 3 events:	☑ Class 3 not used to trigger Unsolicited Responses ☐ Fixed at ☑ Configurable, range **0** to **65535** ☐ Configurable, selectable	250 Note: This is the default setting	software **SCADAPack x70 RemoteConnect** ----------

	from ☐ Configurable, other, describe Note: Configuring the number to 0 stops class 3 events being used as a trigger		
1.9.4 Total number of events from any class:	☑ Total Number of Events not used to trigger Unsolicited Responses ☐ Fixed at ☐ Configurable, range to ☐ Configurable, selectable from ☐ Configurable, other, describe		
1.9.5 Hold time after class 1 event: *A value of 0 indicates that responses are not delayed due to this parameter.*	☑ Class 1 not used to trigger Unsolicited Responses ☐ Fixed at ms ☐ Configurable, range to ms ☐ Configurable, selectable from ms ☐ Configurable, other, describe ☐ Use value specified in section 1.9.8		
1.9.6 Hold time after class 2 event: *A value of 0 indicates that responses are not delayed due to this parameter.*	☑ Class 2 not used to trigger Unsolicited Responses ☐ Fixed at ms ☐ Configurable, range to ms ☐ Configurable, selectable from ms ☐ Configurable, other, describe ☐ Use value specified in section 1.9.8		
1.9.7 Hold time after class 3 event:	☑ Class 3 not used to trigger Unsolicited Responses ☐ Fixed at ms		

A value of 0 indicates that responses are not delayed due to this parameter.	☐ Configurable, range to ms ☐ Configurable, selectable from ms ☐ Configurable, other, describe ☐ Use value specified in section 1.9.8		
1.9.8 Hold time after event assigned to any class: *A value of 0 indicates that responses are not delayed due to this parameter.*	☐ Class events not used to trigger Unsolicited Responses ☐ Fixed at ms ☑ Configurable, range **0** to **65535000**ms ☐ Configurable, selectable from ms ☐ Configurable, other, describe Note: This is configurable in units of seconds	10000 ms Note: This is the default setting	software **SCADAPack x70 RemoteConnect** ----------
1.9.9 Retrigger Hold Time: *The hold-time timer may be retriggered for each new event detected (increased possibility of capturing all the changes in a single response) or not retriggered (giving the master a guaranteed update time).*	☐ Hold-time timer will be retriggered for each new event detected (may get more changes in next response) ☑ Hold-time timer will not be retriggered for each new event detected (guaranteed update time)	Not retriggered	
1.9.10 Other Unsolicited Response Trigger Conditions:	☑ **There is a delay inserted between consecutive unsolicited responses** Note: This is configured by the "Minimum Unsolicited Event Tx Delay" parameter (secs)	Note: 30 seconds (default setting)	software **SCADAPack x70 RemoteConnect** ----------

1.10 OUTSTATION PERFORMANCE	**Capabilities**	**Current Value**	**If configurable list methods**

1.10.1 Maximum Time Base Drift (milliseconds per minute): *If the device is synchronized by DNP, what is the clock drift rate over the full operating temperature range.*	☐ Fixed at ms ☑ Range **-0.4** to **+0.4**ms ☐ Selectable from ms ☐ Other, describe		
1.10.2 When does outstation set IIN1.4: *When does the outstation set the internal indication IIN1.4 NEED_TIME*	☐ Never ☑ Asserted at startup until first Time Synchronization request received ☐ Periodically every seconds ☑ Periodically, range **60** to **3932100** seconds ☐ Periodically, selectable from seconds ☐ seconds after last time sync ☐ Range to seconds after last time sync ☐ Selectable from seconds after last time sync ☐ When time error may have drifted by ms ☐ When time error may have drifted by range to ms ☐ When time error may have drifted by selectable from ms Note: This is configurable in units of minutes	Periodically every 86400 seconds Note: This is the default setting	software **SCADAPack x70 RemoteConnect** ----------
1.10.3 Maximum Internal Time Reference Error when set via DNP (ms): *The difference between the time set in DNP Write Time message, and the time actually set in the outstation.*	☐ Fixed at ms ☑ Range **-30** to **+30**ms ☐ Selectable from ms ☐ Other, describe		
1.10.4 Maximum Delay Measurement Error (ms):	☐ Fixed at ms ☑ Range **0** to **30**ms		

The difference between the time reported in the delay measurement response and the actual time between receipt of the delay measurement request and issuing the delay measurement reply.	☐ Selectable from ms ☐ Other, describe		
1.10.5 Maximum Response Time (ms): *The amount of time an outstation will take to respond upon receipt of a valid request. This does not include the message transmission time.*	☐ Fixed at ms ☑ Range **10** to **50**ms ☐ Selectable from ms ☐ Other, describe		
1.10.6 Maximum time from start-up to IIN 1.4 assertion (ms):	☐ Fixed at ms ☑ Range **1000** to **30000**ms ☐ Selectable from ms ☐ Other, describe		
1.10.7 Maximum Event Time-tag error for local Binary and Double Bit I/O (ms): *The error between the time-tag reported and the absolute time of the physical event. This error includes the Internal Time Reference Error.* *Note: The current value of this parameter is available remotely using protocol object Group 0 Variation 217.*	☑ Fixed at **10**ms ☐ Range to ms ☐ Selectable from ms ☐ Other, describe		
1.10.8 Maximum Event Time-tag error for local I/O other than Binary and Double Bit data types (ms):	☑ Fixed at **30**ms ☐ Range to ms ☐ Selectable from ms ☐ Other, describe		

1.11 INDIVIDUAL FIELD OUTSTATION PARAMETERS	**Value of Current Setting**	**If configurable list methods**

1.11.1 User-assigned location name or code string (same as g0v245):		software **SCADAPack x70 RemoteConnect** ---------- protocol ----------
1.11.2 User-assigned ID code/number string (same as g0v246):		software **SCADAPack x70 RemoteConnect** ---------- protocol ----------
1.11.3 User-assigned name string for the outstation (same as g0v247):		software **SCADAPack x70 RemoteConnect** ---------- protocol ----------
1.11.4 Device serial number string (same as g0v248):		factory ----------

1.12 SECURITY PARAMETERS	**Capabilities**	**Current Value**	**If configurable list methods**
1.12.1 DNP3 device support for secure authentication: *The support for secure authentication is optional in DNP3 devices. Section 1.1.8 indicates if the device supports secure authentication.* *If the device does not support secure authentication then ignore the rest of this section.* *If the device does support secure authentication then specify the version(s) that are supported in the device. The version number is an integer value defined in the*	Supported version (s): ☑ Fixed at **2** ☐ Configurable, selectable from	Version: 2 Note: Enabled through loading a Security Configuration	software **SCADAPack x70 RemoteConnect** ---------- other (USB memory stick, EcoStruxure Geo SCADA Expert)

DNP3 Specification. The Secure Authentication procedure defined in IEEE 1815-2010 is version 2. The Secure Authentication procedure defined in IEEE 1815-2012 is version 5.			
1.12.2 Maximum number of users: *The secure authentication algorithm provides support for multiple users. The device must support details for each user (update keys, session keys, etc). A user is identified by a 16-bit user number, allowing a maximum of 65535 users. Devices are not mandated to support this number of potential users. Indicate here the actual limit to the number of simultaneous users that can be supported.*	☑ Fixed at **1 DNP3 Default User (1) supported** ☐ Configurable, range to	Maximum number of users supported: 1	
1.12.3 Security message response timeout: *Authentication of critical messages may involve additional message exchanges (challenges and responses) which can require an extension to the normal DNP3 message response timeout. This timeout specifies an additional time to be used when the extra security transactions are involved. The maximum allowable timeout extension should not exceed 120 seconds.*	☐ Fixed at ms ☑ Configurable, range **0** to **120000**ms ☐ Configurable, selectable from ms ☐Configurable, other, describe	2000 ms Note: This is the default setting	software **SCADAPack x70 RemoteConnect** ----------
1.12.4 Aggressive mode of operation (receive): *DNP3 devices may (optionally) accept "aggressive" mode requests, where challenge data used for authentication is appended to a critical message rather than needing to be solicited via a separate message exchange.*		◉ Yes, accepts aggressive mode requests ○ No, does not accept aggressive mode requests Note: Configurable.	software **SCADAPack x70 Security Administrator** ----------

		This is the default setting	
1.12.5 Aggressive mode of operation (issuing): *DNP3 devices must support the issuing of "aggressive" mode of operation, where challenge data used for authentication is appended to a critical message rather than needing to be solicited via a separate message exchange. Specific instances of devices may have the use of aggressive mode switched off.*		○ Yes, issues aggressive mode requests ◉ No, does not issue aggressive mode requests Note: Configurable. This is the default setting	software **SCADAPack x70 Security Administrator** ----------
1.12.6 Session key change interval: *To counter an attack that compromises the session key, the session key is changed by the master at regular intervals. Outstation devices invalidate the current set of session keys if they have not been changed by the master station after a period of twice this configured value.* *To accommodate systems with infrequent communications, this change interval can be disabled and just the session key change message count used (see 1.12.7)*	☑ Can be disabled When enabled ☑ Configurable, range **1** to **1209600**seconds	Enabled 1800 seconds Note: This is the default setting	software **SCADAPack x70 Security Administrator** ----------
1.12.7 Session key change message count: *In addition to changing the session key at regular intervals, the key shall also be changed after a specified number of messages have been exchanged. The maximum allowable value for this message count is 10,000*	☑ Configurable, range **10** to **60000**	2000 Note: This is the default setting	software **SCADAPack x70 Security Administrator** ----------

1.12.8 Maximum error count (SAv2 only): *To assist in countering denial of service attacks, a DNP3 device shall stop replying with error codes after a number of successive authentication failures. This error count has a maximum value of 10. Setting the error count to zero inhibits all error messages.* *See 1.12.21 for error counts when using SAv5*	☐ Not applicable (not using SAv2) ☑ Configurable, range **0** to **10**	2 Note: This is the default setting	software **SCADAPack x70 Security Administrator** ----------
1.12.10 Key-wrap algorithm to encrypt session keys: *During the update of a session key, the key is encrypted using AES-128 or optionally using other algorithms.*	☑ AES-128 ☐ AES-256 ☐ Other, explain:	AES-128	software **SCADAPack x70 Security Administrator** ----------
1.12.11 Cipher Suites used with DNP implementations using TLS: *When TLS is supported, DNP3 Secure Authentication mandates the support of TLS_RSA_WITH_AES_128_SHA. The specification has a number of recommended cipher suite combinations. Indicate the supported Cipher Suites for implementations using TLS.*	☑ Not relevant - TLS is not used ☐ TLS_RSA encrypted with AES128 ☐ TLS_RSA encrypted with RC4_128 ☐ TLS_RSA encrypted with 3DES_EDE_CBC ☐ TLS_DH, signed with DSS, encrypted with 3DES_EDE_CBC ☐ TLS_DH, signed with RSA, encrypted with 3DES_EDE_CBC ☐ TLS_DHE, signed with DSS, encrypted with 3DES_EDE_CBC ☐ TLS_DHE, signed with RSA, encrypted with		

	3DES_EDE_CBC ☐TLS_DH, signed with DSS, encrypted with AES128 ☐TLS_DH, signed with DSS, encrypted with AES256 ☐TLS_DH encrypted with AES128 ☐TLS_DH encrypted with AES256 ☐Other, explain:		
1.12.12 Change cipher request timeout: *Implementations using TLS shall terminate the connection if a response to a change cipher request is not seen within this timeout period.*	☑Not relevant - TLS is not used ☐ Fixed at ☐ Configurable, range to ☐ Configurable, selectable from ☐Configurable, other, describe		
1.12.13 Number of Certificate Authorities supported: *Implementations using TLS shall support at least 4 Certificate Authorities. Indicate the number supported.*			
1.12.14 Certificate Revocation check time: *Implementations using TLS shall evaluate Certificate Revocation Lists on a periodic basis, terminating a connection if a certificate is revoked.*	☑Not relevant - TLS is not used ☐ Fixed at hours ☐ Configurable, range to hours ☐ Configurable, selectable from hours ☐Configurable, other, describe		
1.12.15 Additional critical function codes: *The DNP3 specification defines those messages with specific function codes that are critical*	Additional function codes that are to be considered as "critical": ☐0 (Confirm) ☐1 (Read)		

and must be used as part of a secure authentication message exchange. Messages with other function codes are optional and changes to this list should be noted here. *Note: Secure Authentication version 5 defines additional functions as critical that were not considered critical in version 2. These are shown in the next column annotated with "V2 only".*	☐ 7 (Immediate freeze) ☐ 8 (Immediate freeze - no ack) ☐ 9 (Freeze-and-clear) ☐ 10 (Freeze-and-clear - no ack) ☐ 11 (Freeze-at-time) ☐ 12 (Freeze-at-time - no ack) ☑ 22 (Assign Class) ☐ 23 (Delay Measurement) ☑ 25 (Open File) - V2 only ☐ 26 (Close File) - V2 only ☑ 27 (Delete File) - V2 only ☐ 28 (Get File Info) - V2 only ☐ 30 (Abort File) - V2 only ☐ 129 (Response) ☐ 130 (Unsolicited Response)		
1.12.16 Other critical fragments: *Other critical transactions can be defined and should be detailed here. Examples could be based on time (for example: the first transaction after a communications session is established). Other examples could be based on specific data objects (for example: the reading of specific data points).*	External requests to modify configuration or firmware		

1.13 BROADCAST FUNCTIONALITY	**Capabilities**	**Current Value**	**If configurable list methods**

This section indicates which functions are supported by the device when using broadcast addresses. Note that this section shows only entries that may have a meaningful purpose when used with broadcast requests.			
1.13.1 Support for broadcast functionality:	○ Disabled ◉ Enabled ○ Configurable	Enabled	

2 Mapping to IEC 61850 Object Models

This optional section allows each configuration parameter or point in the DNP Data map to be tied to an attribute in the IEC 61850 object models.

Earlier versions of this section (up to version 2.07) used mappings based on an "access point" (section 2.1.1 and then a series of XPath references (section 2.1.2). Section 2.1.2 has been superseded in version 2.08 onwards with mappings defined using either predefined rules (section 2.1.3) or specified as an equation (section 2.1.4). The list of pre-defined rules is found in the IEEE 1815-1 document.

TREE MPPING BETWEEN DNP3 AND IEC 61850 OBJECTS
2.1.3 Rule based mapping Use this element when mapping to/from iec61850 using one of the predefined rules in IEEE 1815.1 Mapping is bi-directional
This section is not included in this Profile.
2.1.4 Equation based mapping Use this element when mapping to/from iec61850 using an equation to map 0 or more input parameters to a single output parameter. Direction of mapping is determined by the variable on the left hand side of the equation.
This section is not included in this Profile.

3 Capabilities and Current Settings for Device Database (Outstation only)

The following tables identify the capabilities and current settings for each DNP3 data type. Details defining the data points available in the device are shown in part 5 of this Device Profile.

3.1 BINARY INPUTS **Static (Steady-State) Group Number: 1** **Event Group Number: 2**			
.	**Capabilities (leave tick-boxes blank if this data type is not supported)**	**Current Value**	**If configurable list methods**
3.1.1 Static Variation reported when variation 0 requested or in response to Class polls:	☑ Variation 1 - packed format ☑ Variation 2 - with flag ☑ Based on point index (add column to table in part 5)	One Note: This is the default setting	software **SCADAPack x70 RemoteConnect** ----------
3.1.2 Event Variation reported when variation 0 requested or in response to Class polls: *Note: The support for binary input events can be determined remotely using protocol object Group 0 Variation 237.*	☑ Variation 1 - without time ☑ Variation 2 - with absolute time ☑ Variation 3 - with relative time ☐ Based on point index (add column to table in part 5)	Two Note: This is the default setting	software **SCADAPack x70 RemoteConnect** ----------
3.1.3 Event reporting mode: *When responding with event data and more than one event has occurred for a data point, an Outstation may include all events or only the most recent event. "All events" must be checked to be compliant.*	☐ Only most recent ☑ All events ☐ Based on point index (add column to table in part 5)	All events	
3.1.4 Binary Inputs included in Class 0 response:	☐ Always ☐ Never ☐ Only if point is assigned to a class ☑ Based on point index (add column to table in part 5)	Never Note: This is the default setting	software **SCADAPack x70 RemoteConnect** ----------

3.1.5 Binary Inputs Event Buffer Organization: *When event buffers are allocated per object group (see part 1.7.6), indicate the number of events that can be buffered for Binary Inputs. If event buffers are not allocated per object group then set "Fixed at 0".*	☑ Fixed at **0** ☐ Configurable, range to ☐ Configurable, selectable from ☐ Configurable, other, describe		

3.2 DOUBLE-BIT BINARY INPUTS **Static (Steady-State) Group Number: 3** **Event Group Number: 4**			
.	**Capabilities (leave tick-boxes blank if this data type is not supported)**	**Current Value**	**If configurable list methods**
This section is not included in this Profile.			

3.3 BINARY OUTPUT STATUS AND CONTROL RELAY OUTPUT BLOCK **Binary Output Status Group Number: 10** **Binary Output Event Group Number: 11** **CROB Group Number: 12** **Binary Output Command Event Group Number: 13**			
.	**Capabilities (leave tick-boxes blank if this data type is not supported)**	**Current Value**	**If configurable list methods**
3.3.1 Minimum pulse time allowed with Trip, Close and Pulse On commands:	☑ Fixed at **0** ms (hardware may limit this further) ☐ Based on point index (add column to table in part 5)	Fixed at 0 ms	
3.3.2 Maximum pulse time allowed with Trip, Close and Pulse On commands:	☑ Fixed at **65535** ms (hardware may limit this further ☐ Based on point index (add column to table in part 5)	Fixed at 65535 ms	
3.3.3 Binary Output Status included in Class 0 response:	☐ Always ☐ Never ☐ Only if point is assigned to a class	Never Note: This is the default setting	software **SCADAPack x70 RemoteConnect**

	☑ Based on point index (add column to table in part 5)		----------
3.3.4 Reports Output Command Event Objects:	☑ Never ☐ Only upon a successful Control ☑ Upon all control attempts Note: Only sent under certain conditions when operating as a Data Concentrator	Never Note: This is the default setting	
3.3.5 Static Variation reported when variation 0 requested or in response to Class polls:	☑ Variation 1 - packed format ☑ Variation 2 - output status with flags ☑ Based on point index (add column to table in part 5)	Two Note: This is the default setting	software **SCADAPack x70 RemoteConnect** ----------
3.3.6 Event Variation reported when variation 0 requested or in response to Class polls: *Note: The support for binary output events can be determined remotely using protocol object Group 0 Variation 222.*	☑ Variation 1 - status without time ☑ Variation 2 - status with time ☐ Based on point index (add column to table in part 5)	Two Note: This is the default setting	software **SCADAPack x70 RemoteConnect** ----------
3.3.7 Command Event Variation reported when variation 0 requested or in response to Class polls:	☑ Variation 1 - command status without time ☑ Variation 2 - command status with time ☐ Based on point index (add column to table in part 5)	Two Note: This is the default setting	software **SCADAPack x70 RemoteConnect** ----------
3.3.8 Event reporting mode: *When responding with event data and more than one event has occurred for a data point, an Outstation may include all events or only the most recent event.*	☐ Only most recent ☑ All events	All events	

3.3.9 Command Event reporting mode: *When responding with event data and more than one event has occurred for a data point, an Outstation may include all events or only the most recent event.*	☐ Only most recent ☑ All events	All events	
3.3.10 Maximum Time between Select and Operate:	☐Not Applicable ☐ Fixed at seconds ☑ Configurable, range **0** to **65535**seconds ☐ Configurable, selectable from seconds ☐Configurable, other, describe ☐ Variable, explain ☐ Based on point index (add column to table in part 5)	10 seconds Note: This is the default setting	software **SCADAPack x70 RemoteConnect** ----------
3.3.11 Binary Outputs Event Buffer Organization: *When event buffers are allocated per object group (see part 1.7.6), indicate the number of events that can be buffered for Binary Outputs. If event buffers are not allocated per object group then set "Fixed at 0".*	☑ Fixed at **0** ☐ Configurable, range to ☐ Configurable, selectable from ☐Configurable, other, describe		
3.3.12 Binary Output Commands Event Buffer Organization: *When event buffers are allocated per object group (see part 1.7.6), indicate the number of events that can be buffered for Binary Output Commands. If event buffers are not allocated per object group then set "Fixed at 0".*	☑ Fixed at **0** ☐ Configurable, range to ☐ Configurable, selectable from ☐Configurable, other, describe		

3.4 COUNTERS / FROZEN COUNTERS

Counter Group Number: 20
Frozen Counter Group Number: 21
Counter Event Group Number: 22
Frozen Counter Event Group Number: 23

.	**Capabilities (leave tick-boxes blank if this data type is not supported)**	**Current Value**	**If configurable list methods**
3.4.1 Static Counter Variation reported when variation 0 requested or in response to Class polls:	☑ Variation 1 - 32-bit with flag ☑ Variation 2 - 16-bit with flag ☑ Variation 5 - 32-bit without flag ☑ Variation 6 - 16-bit without flag ☑ Based on point index (add column to table in part 5)	One Note: This is the default setting	software **SCADAPack x70 RemoteConnect** ----------
3.4.2 Counter Event Variation reported when variation 0 requested or in response to Class polls: *Note: The support for counter events can be determined remotely using protocol object Group 0 Variation 227.*	☑ Variation 1 - 32-bit with flag ☑ Variation 2 - 16-bit with flag ☑ Variation 5 - 32-bit with flag and time ☑ Variation 6 - 16-bit with flag and time ☐ Based on point index (add column to table in part 5)	Five Note: This is the default setting	software **SCADAPack x70 RemoteConnect** ----------
3.4.3 Counters included in Class 0 response:	☐ Always ☐ Never ☐ Only if point is assigned to a class ☑ Based on point index (add column to table in part 5)	Never Note: This is the default setting	software **SCADAPack x70 RemoteConnect** ----------
3.4.4 Counter Event reporting mode: *When responding with event data and more than one event has occurred for a data point, an Outstation may include all events or*	☐ A: Only most recent (value at time of event) ☐ B: Only most recent (value at time of response) ☑ C: All events ☐ Based on point index	All events	

only the most recent event. Only the most recent event is typically reported for Counters. When reporting only the most recent event the counter value returned in the response may be either the value at the time that the event is queued or it may be the value at the time of the response.	(add column to table in part 5)		
3.4.5 Static Frozen Counter Variation reported when variation 0 requested or in response to Class polls:	☐ Variation 1 - 32-bit with flag ☐ Variation 2 - 16-bit with flag ☐ Variation 5 - 32-bit with flag and time ☐ Variation 6 - 16-bit with flag and time ☐ Variation 9 - 32-bit without flag ☐ Variation 10 - 16-bit without flag ☐ Based on point index (add column to table in part 5) Note: Not applicable - frozen counters not supported		
3.4.6 Frozen Counter Event Variation reported when variation 0 requested or in response to Class polls: *Note: The support for frozen counter events can be determined remotely using protocol object Group 0 Variation 225.*	☐ Variation 1 - 32-bit with flag ☐ Variation 2 - 16-bit with flag ☐ Variation 5 - 32-bit without flag ☐ Variation 6 - 16-bit without flag ☐ Based on point index (add column to table in part 5) Note: Not applicable - frozen counters not supported		
3.4.7 Frozen Counters included in Class 0 response:	☐ Always ☐ Never ☐ Only if point is		

	assigned to a class ☐ Based on point index (add column to table in part 5) Note: Not applicable - frozen counters not supported		
3.4.8 Frozen Counter Event reporting mode: *When responding with event data and more than one event has occurred for a data point, an Outstation may include all events or only the most recent event. All events are typically reported for Frozen Counters*	☐ Only most recent frozen value ☐ All frozen values ☐ Based on point index (add column to table in part 5) Note: Not applicable - frozen counters not supported		
3.4.9 Counters Roll Over at:	☐ 16 Bits (65,535) ☑ 32 Bits (4,294,967,295) ☐ Fixed at ☐ Configurable, range to ☐ Configurable, selectable from ☐ Configurable, other, describe ☐ Based on point index (add column to table in part 5)	4,294,967,295	
3.4.10 Counters frozen by means of:	☐ Master Request ☐ Freezes itself without concern for time of day ☐ Freezes itself and requires time of day ☐ Other, explain: Note: Not applicable - frozen counters not supported		
3.4.11 Counters Event Buffer Organization: *When event buffers are allocated per object group (see part 1.7.6), indicate*	☑ Fixed at **0** ☐ Configurable, range to ☐ Configurable, selectable from ☐ Configurable, other,		

the number of events that can be buffered for Counters. If event buffers are not allocated per object group then set "Fixed at 0".	describe		
3.4.12 Frozen Counters Event Buffer Organization: *When event buffers are allocated per object group (see part 1.7.6), indicate the number of events that can be buffered for Frozen Counters. If event buffers are not allocated per object group then set "Fixed at 0".*	☑ Fixed at **0** ☐ Configurable, range to ☐ Configurable, selectable from ☐ Configurable, other, describe		
3.4.13 Reports counter events for change of value: *Indicate if counter events are created when the counter value changes.*	☐ Yes for all counters ☐ No for all counters ☑ Based on point index (add column to table in part 5)		

3.5 ANALOG INPUTS / FROZEN ANALOG INPUTS **Static (Steady-State) Group Number: 30** **Static Frozen Group Number: 31** **Event Group Number: 32** **Frozen Analog Input Event Group Number: 31** **Deadband Group Number: 34**			
.	**Capabilities (leave tick-boxes blank if this data type is not supported)**	**Current Value**	**If configurable list methods**
3.5.1 Static Variation reported when variation 0 requested or in response to Class polls:	☑ Variation 1 - 32-bit with flag ☑ Variation 2 - 16-bit with flag ☑ Variation 3 - 32-bit without flag ☑ Variation 4 - 16-bit without flag ☑ Variation 5 - single-precision floating point with flag ☐ Variation 6 - double-	One Note: This is the default setting	software **SCADAPack x70 RemoteConnect** ----------

	precision floating point with flag ☑ Based on point index (add column to table in part 5)		
3.5.2 Event Variation reported when variation 0 requested or in response to Class polls: *Note: The support for analog input events can be determined remotely using protocol object Group 0 Variation 231.*	☑ Variation 1 - 32-bit without time ☑ Variation 2 - 16-bit without time ☑ Variation 3 - 32-bit with time ☑ Variation 4 - 16-bit with time ☑ Variation 5 - single-precision floating point w/o time ☐ Variation 6 - double-precision floating point w/o time ☑ Variation 7 - single-precision floating point with time ☐ Variation 8 - double-precision floating point with time ☑ Based on point index (add column to table in part 5)	Three Note: This is the default setting	software **SCADAPack x70 RemoteConnect** ----------
3.5.3 Event reporting mode: *When responding with event data and more than one event has occurred for a data point, an Outstation may include all events or only the most recent event. Only the most recent event is typically reported for Analog Inputs. When reporting only the most recent event the analog value returned in the response may be either the value at the time that the event is queued or it may be*	☑ A: Only most recent (value at time of event) ☐ B: Only most recent (value at time of response) ☑ C: All events ☐ Based on point index (add column to table in part 5)	All events Note: This is the default setting	software **SCADAPack x70 RemoteConnect** ----------

the value at the time of the response.			
3.5.4 Analog Inputs included in Class 0 response:	☐ Always ☐ Never ☐ Only if point is assigned to a class ☑ Based on point index (add column to table in part 5)	Never Note: This is the default setting	software **SCADAPack x70 RemoteConnect** ----------
3.5.5 How Deadbands are set:	☐ A. Global Fixed ☑ B. Configurable through DNP ☑ C. Configurable via other means ☐ D. Other, explain: ☑ Based on point index - column in part 5 specifies which of the options applies, B, C, or D		software **SCADAPack x70 RemoteConnect** ----------
3.5.6 Analog Deadband Algorithm: simple- just compares the difference from the previous reported value integrating- keeps track of the accumulated change other- indicating another algorithm	☑ Simple ☑ Integrating ☐ Other, explain: ☑ Based on point index (add column to table in part 5)	Simple Note: This is the default setting	software **SCADAPack x70 RemoteConnect** ----------
3.5.7 Static Frozen Analog Input Variation reported when variation 0 requested or in response to Class polls:	☐ Variation 1 - 32-bit with flag ☐ Variation 2 - 16-bit with flag ☐ Variation 3 - 32-bit with time-of-freeze ☐ Variation 4 - 16-bit with time-of-freeze ☐ Variation 5 - 32-bit without flag		

	☐ Variation 6 - 16-bit without flag ☐ Variation 7 - single-precision floating point with flag ☐ Variation 8 - double-precision floating point with flag ☐ Based on point index (add column to table in part 5) Note: Not applicable - frozen analogs not supported		
3.5.8 Frozen Analog Input Event Variation reported when variation 0 requested or in response to Class polls: *Note: The support for frozen analog input events can be determined remotely using protocol object Group 0 Variation 230.*	☐ Variation 1 - 32-bit without time ☐ Variation 2 - 16-bit without time ☐ Variation 3 - 32-bit with time ☐ Variation 4 - 16-bit with time ☐ Variation 5 - single-precision floating point w/o time ☐ Variation 6 - double-precision floating point w/o time ☐ Variation 7 - single-precision floating point with time ☐ Variation 8 - double-precision floating point with time ☐ Based on point index (add column to table in part 5) Note: Not applicable - frozen analogs not supported		
3.5.9 Frozen Analog Inputs included in Class 0 response:	☐ Always ☐ Never ☐ Only if point is assigned to a class ☐ Based on point index		

	(add column to table in part 5) Note: Not applicable - frozen analogs not supported		
3.5.10 Frozen Analog Input Event reporting mode: *When responding with event data and more than one event has occurred for a data point, an Outstation may include all events or only the most recent event. All events are typically reported for Frozen Analog Inputs.*	☐ Only most recent frozen value ☐ All frozen values ☐ Based on point index (add column to table in part 5) Note: Not applicable - frozen analogs not supported		
3.5.11 Analog Inputs Event Buffer Organization: *When event buffers are allocated per object group (see part 1.7.6), indicate the number of events that can be buffered for Analog Inputs. If event buffers are not allocated per object group then set "Fixed at 0".*	☑ Fixed at **0** ☐ Configurable, range to ☐ Configurable, selectable from ☐ Configurable, other, describe		
3.5.12 Frozen Analog Inputs Event Buffer Organization: *When event buffers are allocated per object group (see part 1.7.6), indicate the number of events that can be buffered for Frozen Analog Inputs. If event buffers are not allocated per object group then set "Fixed at 0".*	☐ Fixed at ☐ Configurable, range to ☐ Configurable, selectable from ☐ Configurable, other, describe Note: Not applicable - frozen analogs not supported		

3.6 ANALOG OUTPUTS / ANALOG OUTPUT COMMANDS

Analog Output Status Group Number: 40
Analog Outputs Group Number: 41

Analog Output Events Group Number: 42 **Analog Output Command Events Group Number: 43**			
.	**Capabilities (leave tick-boxes blank if this data type is not supported)**	**Current Value**	**If configurable list methods**
3.6.1 Static Analog Output Status Variation reported when variation 0 requested or in response to Class polls:	☑ Variation 1 - 32-bit with flag ☑ Variation 2 - 16-bit with flag ☑ Variation 3 - single-precision floating point with flag ☐ Variation 4 - double-precision floating point with flag ☑ Based on point index (add column to table in part 5)	One Note: This is the default setting	software **SCADAPack x70 RemoteConnect** ----------
3.6.2 Analog Output Status included in Class 0 response:	☐ Always ☐ Never ☐ Only if point is assigned to a class ☑ Based on point index (add column to table in part 5)	Never Note: This is the default setting	software **SCADAPack x70 RemoteConnect** ----------
3.6.3 Reports Output Command Event Objects:	☑ Never ☐ Only upon a successful Control ☑ Upon all control attempts Note: Only sent under certain conditions when operating as a Data Concentrator	Never Note: This is the default setting	
3.6.4 Event Variation reported when variation 0 requested or in response to Class polls: *Note: The support for analog output events can be determined remotely using protocol object Group 0 Variation 219.*	☑ Variation 1 - 32-bit without time ☑ Variation 2 - 16-bit without time ☑ Variation 3 - 32-bit with time ☑ Variation 4 - 16-bit with time ☑ Variation 5 - single-	Three Note: This is the default setting	software **SCADAPack x70 RemoteConnect** ----------

	precision floating point w/o time ☐ Variation 6 - double-precision floating point w/o time ☑ Variation 7 - single-precision floating point with time ☐ Variation 8 - double-precision floating point with time ☑ Based on point index (add column to table in part 5)		
3.6.5 Command Event Variation reported when variation 0 requested or in response to Class polls:	☑ Variation 1 - 32-bit without time ☑ Variation 2 - 16-bit without time ☑ Variation 3 - 32-bit with time ☑ Variation 4 - 16-bit with time ☑ Variation 5 - single-precision floating point w/o time ☐ Variation 6 - double-precision floating point w/o time ☑ Variation 7 - single-precision floating point with time ☐ Variation 8 - double-precision floating point with time ☑ Based on point index (add column to table in part 5)	Three Note: This is the default setting	software **SCADAPack x70 RemoteConnect** ----------
3.6.6 Event reporting mode: *When responding with event data and more than one event has occurred for a data point, an Outstation may include all events or only the most recent event.*	☐ Only most recent ☑ All events		

3.6.7 Command Event reporting mode: *When responding with event data and more than one event has occurred for a data point, an Outstation may include all events or only the most recent event.*	☐ Only most recent ☑ All events		
3.6.8 Maximum Time between Select and Operate:	☐ Not Applicable ☐ Fixed at seconds ☑ Configurable, range **0** to **65535** seconds ☐ Configurable, selectable from seconds ☐ Configurable, other, describe ☐ Variable, explain ☐ Based on point index (add column to table in part 5)	10 seconds Note: This is the default setting	software **SCADAPack x70 RemoteConnect** ----------
3.6.9 Analog Outputs Event Buffer Organization: *When event buffers are allocated per object group (see part 1.7.6), indicate the number of events that can be buffered for Analog Outputs. If event buffers are not allocated per object group then set "Fixed at 0".*	☑ Fixed at **0** ☐ Configurable, range to ☐ Configurable, selectable from ☐ Configurable, other, describe		
3.6.10 Analog Output Commands Event Buffer Organization: *When event buffers are allocated per object group (see part 1.7.6), indicate the number of events that can be buffered for Analog Output Commands. If event buffers are not allocated per object group then set "Fixed at 0".*	☑ Fixed at **0** ☐ Configurable, range to ☐ Configurable, selectable from ☐ Configurable, other, describe		

3.7 FILE CONTROL
Group Number: 70

.	**Capabilities**	**Current Value**	**If configurable list methods**
3.7.1 File Transfer Supported:	☑ Supported If not supported then do not complete other entries in section 3.7)		
3.7.2 File Authentication: *Indicates whether a valid authentication key must be obtained prior to open and delete requests.*	☐ Always ☐ Sometimes, explain ☑ Never	Never	
3.7.3 File Append Mode: *Indicates if a file can be opened and appended to versus just overwritten.*	☑ Always ☐ Sometimes, explain ☐ Never	Always	
3.7.4 Permissions Support: *Indicates the device is capable of using the indicated permissions.*	☐ Owner Read Allowed: 0x0100 ☐ Owner Write Allowed: 0x0080 ☐ Owner Execute Allowed: 0x0040 ☐ Group Read Allowed: 0x0020 ☐ Group Write Allowed: 0x0010 ☐ Group Execute Allowed: 0x0008 ☐ World Read Allowed: 0x0004 ☐ World Write Allowed: 0x0002 ☐ World Execute Allowed: 0x0001		
3.7.5 Multiple Blocks in a Fragment: *File data is transferred in a series of blocks of a maximum specified size. This indicates whether only a single block or multiple blocks will be sent in fragment.*	☐ Yes ☑ No	No	

3.7.6 Max number of Files Open at one time:	☑ Fixed at **1** ☐ Configurable, range to ☐ Configurable, selectable from ☐ Configurable, other, describe	1	

3.8 OCTET STRING AND EXTENDED OCTET STRING POINTS **Static (Steady-State) Group Number: 110, 114** **Event Group Number: 111, 115**			
.	**Capabilities**	**Current Value**	**If configurable list methods**
3.8.1 Event reporting mode: *When responding with event data and more than one event has occurred for a data point, an Outstation may include all events or only the most recent event.*	☐ Only most recent ☐ All events ☐ Based on point index (add column to table in part 5) Note: Not applicable - device does not generate string events		
3.8.2 Octet Strings included in Class 0 response:	☐ Always ☑ Never ☐ Only if point is assigned to a class ☐ Based on point index (add column to table in part 5)	Never	
3.8.3 Octet Strings Event Buffer Organization: *When event buffers are allocated per object group (see part 1.7.6), indicate the number of events that can be buffered for Octet Strings. If event buffers are not allocated per object group then set "Fixed at 0".*	☑ Fixed at **0** ☐ Configurable, range to ☐ Configurable, selectable from ☐ Configurable, other, describe		
3.8.4 Object Group Selection: *Indicate which object group is used to transport octet string objects.*	☑ Fixed, group 110 for all objects ☐ Fixed, group 114 for all objects ☐ Configurable, group 110 or 114 for all objects		

	☐ Based on point Index (add column to table in part 5)		

3.9 VIRTUAL TERMINAL PORT NUMBERS (POINTS) **Static (Steady-State) Group Number: 112** **Event Group Number: 113**			
.	**Capabilities**	**Current Value**	**If configurable list methods**
3.9.1 Virtual Terminals Event Buffer Organization: *When event buffers are allocated per object group (see part 1.7.6), indicate the number of events that can be buffered for Virtual Terminals. If event buffers are not allocated per object group then set "Fixed at 0".*	☑ Fixed at **0** ☐ Configurable, range to ☐ Configurable, selectable from ☐ Configurable, other, describe		

3.10 DATA SET PROTOTYPE **Group Number: 85** **Variation Number: 1**			
.	**Capabilities**	**Current Value**	**If configurable list methods**

This version of the Device Profile has no requirement for describing Data Set Prototype capabilities and current settings. This page is intentionally left blank, existing as placeholder for future use.

3.11 DATA SET DESCRIPTOR CONTENTS AND CHARACTERISTICS
Group Number: 86
Variation Numbers: 1 and 2

This version of the Device Profile has no requirement for describing Data Set Descriptor capabilities and current settings. This page is intentionally left blank, existing as placeholder for future use.

4 Implementation Table

The following implementation table identifies which object groups and variations, function codes and qualifiers the device supports in both requests and responses. The *Request*

columns identify all requests that may be sent by a Master, or all requests that must be parsed by an Outstation. The *Response* columns identify all responses that must be parsed by a Master, or all responses that may be sent by an Outstation.

DNP OBJECT GROUP & VARIATION			**REQUEST Master may issue Outstation must parse**		**RESPONSE Master must parse Outstation may issue**	
Object Group Number	**Variation Number**	**Description**	**Function Codes (dec)**	**Qualifier Codes (hex)**	**Function Codes (dec)**	**Qualifier Codes (hex)**
0	203	Device Attributes - Device location altitude (metres)	1*(read)*	00 *(start-stop)*	*(Response)*	00, 17 *(index)*
0	203	Device Attributes - Device location altitude (metres)	2*(write)*	00 *(start-stop)*		
0	204	Device Attributes - Device location longitude (degrees East)	1*(read)*	00 *(start-stop)*	*(Response)*	00, 17 *(index)*
0	204	Device Attributes - Device location longitude (degrees East)	2*(write)*	00 *(start-stop)*		
0	205	Device Attributes - Device location latitude (degrees North)	1*(read)*	00 *(start-stop)*	*(Response)*	00, 17 *(index)*
0	205	Device Attributes - Device location latitude (degrees North)	2*(write)*	00 *(start-stop)*		
0	211	Device Attributes - Identifier of support for user-specific attributes	1*(read)*	00 *(start-stop)*	*(Response)*	00, 17 *(index)*
0	212	Device Attributes - Number of master-defined data set prototypes	1*(read)*	00 *(start-stop)*	*(Response)*	00, 17 *(index)*
0	213	Device Attributes - Number of outstation-defined data set prototypes	1*(read)*	00 *(start-stop)*	*(Response)*	00, 17 *(index)*
0	214	Device Attributes - Number of master-defined data sets	1*(read)*	00 *(start-stop)*	*(Response)*	00, 17 *(index)*
0	215		1*(read)*		*(Response)*	

		Device Attributes - Number of outstation-defined data sets		00 *(start-stop)*		00, 17 *(index)*
0	216	Device Attributes - Max number of binary outputs per request	1 *(read)*	00 *(start-stop)*	*(Response)*	00, 17 *(index)*
0	217	Device Attributes - Local timing accuracy	1 *(read)*	00 *(start-stop)*	*(Response)*	00, 17 *(index)*
0	218	Device Attributes - Duration of timing accuracy	1 *(read)*	00 *(start-stop)*	*(Response)*	00, 17 *(index)*
0	219	Device Attributes - Support for analog output events	1 *(read)*	00 *(start-stop)*	*(Response)*	00, 17 *(index)*
0	220	Device Attributes - Max analog output index	1 *(read)*	00 *(start-stop)*	*(Response)*	00, 17 *(index)*
0	221	Device Attributes - Number of analog outputs	1 *(read)*	00 *(start-stop)*	*(Response)*	00, 17 *(index)*
0	222	Device Attributes - Support for binary output events	1 *(read)*	00 *(start-stop)*	*(Response)*	00, 17 *(index)*
0	223	Device Attributes - Max binary output index	1 *(read)*	00 *(start-stop)*	*(Response)*	00, 17 *(index)*
0	224	Device Attributes - Number of binary outputs	1 *(read)*	00 *(start-stop)*	*(Response)*	00, 17 *(index)*
0	225	Device Attributes - Support for frozen counter events	1 *(read)*	00 *(start-stop)*	*(Response)*	00, 17 *(index)*
0	226	Device Attributes - Support for frozen counters	1 *(read)*	00 *(start-stop)*	*(Response)*	00, 17 *(index)*
0	227	Device Attributes - Support for counter events	1 *(read)*	00 *(start-stop)*	*(Response)*	00, 17 *(index)*
0	228	Device Attributes - Max counter index	1 *(read)*	00 *(start-stop)*	*(Response)*	00, 17 *(index)*
0	229	Device Attributes - Number of counter points	1 *(read)*	00 *(start-stop)*	*(Response)*	00, 17 *(index)*
0	230		1 *(read)*	00 *(start-stop)*	*(Response)*	00, 17 *(index)*

		Device Attributes - Support for frozen analog inputs				
0	231	Device Attributes - Support for analog input events	1*(read)*	00 *(start-stop)*	*(Response)*	00, 17 *(index)*
0	232	Device Attributes - Maximum analog input index	1*(read)*	00 *(start-stop)*	*(Response)*	00, 17 *(index)*
0	233	Device Attributes - Number of analog input points	1*(read)*	00 *(start-stop)*	*(Response)*	00, 17 *(index)*
0	234	Device Attributes - Support for double-bit binary input events	1*(read)*	00 *(start-stop)*	*(Response)*	00, 17 *(index)*
0	235	Device Attributes - Maximum double-bit binary input index	1*(read)*	00 *(start-stop)*	*(Response)*	00, 17 *(index)*
0	236	Device Attributes - Number of double-bit binary input points	1*(read)*	00 *(start-stop)*	*(Response)*	00, 17 *(index)*
0	237	Device Attributes - Support for binary input events	1*(read)*	00 *(start-stop)*	*(Response)*	00, 17 *(index)*
0	238	Device Attributes - Max binary input index	1*(read)*	00 *(start-stop)*	*(Response)*	00, 17 *(index)*
0	239	Device Attributes - Number of binary input points	1*(read)*	00 *(start-stop)*	*(Response)*	00, 17 *(index)*
0	240	Device Attributes - Max transmit fragment size	1*(read)*	00 *(start-stop)*	*(Response)*	00, 17 *(index)*
0	240	Device Attributes - Max transmit fragment size	2*(write)*	00 *(start-stop)*		
0	241	Device Attributes - Max receive fragment size	1*(read)*	00 *(start-stop)*	*(Response)*	00, 17 *(index)*
0	242	Device Attributes - Device manufacturer's software version	1*(read)*	00 *(start-stop)*	*(Response)*	00, 17 *(index)*
0	243	Device Attributes - Device manufacturer's hardware version	1*(read)*	00 *(start-stop)*	*(Response)*	00, 17 *(index)*
0	245		1*(read)*	00 *(start-stop)*	*(Response)*	00, 17 *(index)*

		Device Attributes - User-assigned location name				
0	245	Device Attributes - User-assigned location name	2*(write)*	00 *(start-stop)*		
0	246	Device Attributes – User assigned ID code/number	1*(read)*	00 *(start-stop)*	*(Response)*	00, 17 *(index)*
0	246	Device Attributes – User assigned ID code/number	2*(write)*	00 *(start-stop)*		
0	247	Device Attributes - User-assigned device name	1*(read)*	00 *(start-stop)*	*(Response)*	00, 17 *(index)*
0	247	Device Attributes - User-assigned device name	2*(write)*	00 *(start-stop)*		
0	248	Device Attributes – Device serial number	1*(read)*	00 *(start-stop)*	*(Response)*	00, 17 *(index)*
0	249	Device Attributes – DNP subset and conformance	1*(read)*	00 *(start-stop)*	*(Response)*	00, 17 *(index)*
0	250	Device Attributes – Device manufacturer's product name and model	1*(read)*	00 *(start-stop)*	*(Response)*	00, 17 *(index)*
0	252	Device Attributes – Device manufacturer's name	1*(read)*	00 *(start-stop)*	*(Response)*	00, 17 *(index)*
0	254	Device Attributes - Non-specific all attributes request	1*(read)*	00, 01 *(start-stop)*, 06 *(no range, or all)*		
0	255	Device Attributes - List of attribute variations	1*(read)*	00, 01 *(start-stop)*, 06 *(no range, or all)*	*(Response)*	00, 5B
1	0	Binary Input - any variation	1*(read)*	00, 01 *(start-stop)*, 06 *(no*		

				range, or all)		
1	0	Binary Input - any variation	22*(assign class)*	00, 01 *(start-stop)*, 06 *(no range, or all)*		
1	1	Binary Input - Single-bit packed	1*(read)*	00, 01 *(start-stop)*, 06 *(no range, or all)*	*(Response)*	00, 01 *(start-stop)*
1	2	Binary Input - Single-bit with flag	1*(read)*	00, 01 *(start-stop)*, 06 *(no range, or all)*	*(Response)*	00, 01 *(start-stop)*
2	0	Binary Input Change Event - any variation	1*(read)*	06 *(no range, or all)*, 07, 08 *(limited qty)*		
2	1	Binary Input Change Event - without time	1*(read)*	06 *(no range, or all)*, 07, 08 *(limited qty)*	*(Response)*	17, 28 *(index)*
2	1	Binary Input Change Event - without time			*(Unsol. Resp.)*	17, 28 *(index)*
2	2	Binary Input Change Event - with absolute time	1*(read)*	06 *(no range, or all)*, 07, 08 *(limited qty)*	*(Response)*	17, 28 *(index)*
2	2	Binary Input Change Event - with absolute time			*(Unsol. Resp.)*	17, 28 *(index)*
2	3	Binary Input Change Event - with relative time	1*(read)*	06 *(no range, or all)*, 07, 08 *(limited qty)*	*(Response)*	17, 28 *(index)*

2	3	Binary Input Change Event - with relative time			*(Unsol. Resp.)*	17, 28 *(index)*
3	0	Double-Bit Binary Input - any variation	1*(read)*	00, 01 *(start-stop)*, 06 *(no range, or all)*		
3	0	Double-Bit Binary Input - any variation	22*(assign class)*	00, 01 *(start-stop)*, 06 *(no range, or all)*		
3	1	Double-Bit Binary Input - packed format	1*(read)*	00, 01 *(start-stop)*, 06 *(no range, or all)*		
3	2	Double-Bit Binary Input - with flags	1*(read)*	00, 01 *(start-stop)*, 06 *(no range, or all)*		
4	0	Double-Bit Binary Input Change Event - any variation	1*(read)*	06 *(no range, or all)*, 07, 08 *(limited qty)*		
4	1	Double-Bit Binary Input Change Event - without time	1*(read)*	06 *(no range, or all)*, 07, 08 *(limited qty)*		
4	2	Double-Bit Binary Input Change Event - with absolute time	1*(read)*	06 *(no range, or all)*, 07, 08 *(limited qty)*		
4	3	Double-Bit Binary Input Change Event - with relative time	1*(read)*	06 *(no range, or all)*, 07, 08		

				(limited qty)		
10	0	Continuous Control - any variation	1*(read)*	00, 01 *(start-stop)*, 06 *(no range, or all)*		
10	0	Continuous Control - any variation	22*(assign class)*	00, 01 *(start-stop)*, 06 *(no range, or all)*		
10	2	Continuous Control - binary output status	1*(read)*	00, 01 *(start-stop)*, 06 *(no range, or all)*	*(Response)*	00, 01 *(start-stop)*
11	0	Binary Output Event - any variation	1*(read)*	06 *(no range, or all)*, 07, 08 *(limited qty)*		
11	1	Binary Output Event - Status without time	1*(read)*	06 *(no range, or all)*, 07, 08 *(limited qty)*	*(Response)*	17, 28 *(index)*
11	1	Binary Output Event - Status without time			*(Unsol. Resp.)*	17, 28 *(index)*
11	2	Binary Output Event - Status with time	1*(read)*	06 *(no range, or all)*, 07, 08 *(limited qty)*	*(Response)*	17, 28 *(index)*
11	2	Binary Output Event - Status with time			*(Unsol. Resp.)*	17, 28 *(index)*
12	0	Binary Command - control relay output block (CROB)	22*(assign class)*	00, 01 *(start-stop)*, 06 *(no range, or all)*		
12	1		3*(select)*		*(Response)*	

		Binary Command - control relay output block (CROB)		17, 28 *(index)*		echo of request
12	1	Binary Command - control relay output block (CROB)	4*(operate)*	17, 28 *(index)*	*(Response)*	echo of request
12	1	Binary Command - control relay output block (CROB)	5*(direct op.)*	17, 28 *(index)*	*(Response)*	echo of request
12	1	Binary Command - control relay output block (CROB)	6*(direct op, no ack)*	17, 28 *(index)*	*(Response)*	echo of request
13	0	Binary Output Command Event - any variation	1*(read)*	06 *(no range, or all)*, 07, 08 *(limited qty)*		
13	1	Binary Output Command Event - command status	1*(read)*	06 *(no range, or all)*, 07, 08 *(limited qty)*	*(Response)*	17, 28 *(index)*
13	1	Binary Output Command Event - command status			*(Unsol. Resp.)*	17, 28 *(index)*
13	2	Binary Output Command Event - command status with time	1*(read)*	06 *(no range, or all)*, 07, 08 *(limited qty)*	*(Response)*	17, 28 *(index)*
13	2	Binary Output Command Event - command status with time			*(Unsol. Resp.)*	17, 28 *(index)*
20	0	Counter - any variation	1*(read)*	00, 01 *(start-stop)*, 06 *(no range, or all)*		
20	0	Counter - any variation	7*(freeze)*	00, 01 *(start-stop)*, 06 *(no*		

				range, or all)		
20	0	Counter - any variation	8*(freeze, no ack)*	00, 01 *(start-stop)*, 06 *(no range, or all)*		
20	0	Counter - any variation	9*(freeze & clear)*	00, 01 *(start-stop)*, 06 *(no range, or all)*		
20	0	Counter - any variation	10*(frz & clr, no ack)*	00, 01 *(start-stop)*, 06 *(no range, or all)*		
20	0	Counter - any variation	15*(init. data)*	00, 01 *(start-stop)*, 06 *(no range, or all)*		
20	0	Counter - any variation	22*(assign class)*	00, 01 *(start-stop)*, 06 *(no range, or all)*		
20	1	Counter - 32-bit with flag	1*(read)*	00, 01 *(start-stop)*, 06 *(no range, or all)*	*(Response)*	00, 01 *(start-stop)*
20	1	Counter - 32-bit with flag	2*(write)*	00, 01 *(start-stop)*		
20	2	Counter - 16-bit with flag	1*(read)*	00, 01 *(start-stop)*, 06 *(no range, or all)*	*(Response)*	00, 01 *(start-stop)*
20	2	Counter - 16-bit with flag	2*(write)*	00, 01 *(start-stop)*		
20	5		1*(read)*		*(Response)*	

		Counter - 32-bit without flag		00, 01 *(start-stop)*, 06 *(no range, or all)*		00, 01 *(start-stop)*
20	5	Counter - 32-bit without flag	2*(write)*	00, 01 *(start-stop)*		
20	6	Counter - 16-bit without flag	1*(read)*	00, 01 *(start-stop)*, 06 *(no range, or all)*	*(Response)*	00, 01 *(start-stop)*
20	6	Counter - 16-bit with flag	2*(write)*	00, 01 *(start-stop)*		
21	0	Frozen Counter - any variation	1*(read)*	00, 01 *(start-stop)*, 06 *(no range, or all)*		
21	0	Frozen Counter - any variation	22*(assign class)*	00, 01 *(start-stop)*, 06 *(no range, or all)*		
21	1	Frozen Counter - 32-bit with flag	1*(read)*	00, 01 *(start-stop)*, 06 *(no range, or all)*		
21	2	Frozen Counter - 16-bit with flag	1*(read)*	00, 01 *(start-stop)*, 06 *(no range, or all)*		
21	5	Frozen Counter - 32-bit with flag and time	1*(read)*	00, 01 *(start-stop)*, 06 *(no range, or all)*		
21	6	Frozen Counter - 16-bit with flag and time	1*(read)*	00, 01 *(start-stop)*,		

				06 *(no range, or all)*		
21	9	Frozen Counter - 32-bit without flag	1*(read)*	00, 01 *(start-stop)*, 06 *(no range, or all)*		
21	10	Frozen Counter - 16-bit without flag	1*(read)*	00, 01 *(start-stop)*, 06 *(no range, or all)*		
22	0	Counter Change Event - any variation	1*(read)*	06 *(no range, or all)*, 07, 08 *(limited qty)*		
22	1	Counter Change Event - 32-bit with flag	1*(read)*	06 *(no range, or all)*, 07, 08 *(limited qty)*	*(Response)*	17, 28 *(index)*
22	1	Counter Change Event - 32-bit with flag			*(Unsol. Resp.)*	17, 28 *(index)*
22	2	Counter Change Event - 16-bit with flag	1*(read)*	06 *(no range, or all)*, 07, 08 *(limited qty)*	*(Response)*	17, 28 *(index)*
22	2	Counter Change Event - 16-bit with flag			*(Unsol. Resp.)*	17, 28 *(index)*
22	5	Counter Change Event - 32-bit with flag and time	1*(read)*	06 *(no range, or all)*, 07, 08 *(limited qty)*	*(Response)*	17, 28 *(index)*
22	5	Counter Change Event - 32-bit with flag and time			*(Unsol. Resp.)*	17, 28 *(index)*
22	6	Counter Change Event - 16-bit with flag and time	1*(read)*	06 *(no range, or all)*, 07, 08	*(Response)*	17, 28 *(index)*

				(limited qty)		
22	6	Counter Change Event - 16-bit with flag and time			*(Unsol. Resp.)*	17, 28 *(index)*
23	0	Frozen Counter Event - any variation	1*(read)*	06 *(no range, or all)*, 07, 08 *(limited qty)*		
23	1	Frozen Counter Event - 32-bit with flag	1*(read)*	06 *(no range, or all)*, 07, 08 *(limited qty)*		
23	2	Frozen Counter Event - 16-bit with flag	1*(read)*	06 *(no range, or all)*, 07, 08 *(limited qty)*		
23	5	Frozen Counter Event - 32-bit with flag and time	1*(read)*	06 *(no range, or all)*, 07, 08 *(limited qty)*		
23	6	Frozen Counter Event - 16-bit with flag and time	1*(read)*	06 *(no range, or all)*, 07, 08 *(limited qty)*		
30	0	Analog Input - any variation	1*(read)*	00, 01 *(start-stop)*, 06 *(no range, or all)*		
30	0	Analog Input - any variation	22*(assign class)*	00, 01 *(start-stop)*, 06 *(no range, or all)*		
30	1	Analog Input - 32-bit with flag	1*(read)*	00, 01 *(start-stop)*, 06 *(no*	*(Response)*	00, 01 *(start-stop)*

				range, or all)		
30	2	Analog Input - 16-bit with flag	1*(read)*	00, 01 *(start-stop)*, 06 *(no range, or all)*	*(Response)*	00, 01 *(start-stop)*
30	3	Analog Input - 32-bit without flag	1*(read)*	00, 01 *(start-stop)*, 06 *(no range, or all)*	*(Response)*	00, 01 *(start-stop)*
30	4	Analog Input - 16-bit without flag	1*(read)*	00, 01 *(start-stop)*, 06 *(no range, or all)*	*(Response)*	00, 01 *(start-stop)*
30	5	Analog Input - single-precision, floating-point with flag	1*(read)*	00, 01 *(start-stop)*, 06 *(no range, or all)*	*(Response)*	00, 01 *(start-stop)*
32	0	Analog Input Change Event - any variation	1*(read)*	06 *(no range, or all)*, 07, 08 *(limited qty)*		
32	1	Analog Input Change Event - 32-bit without time	1*(read)*	06 *(no range, or all)*, 07, 08 *(limited qty)*	*(Response)*	17, 28 *(index)*
32	1	Analog Input Change Event - 32-bit without time			*(Unsol. Resp.)*	17, 28 *(index)*
32	2	Analog Input Change Event - 16-bit without time	1*(read)*	06 *(no range, or all)*, 07, 08 *(limited qty)*	*(Response)*	17, 28 *(index)*
32	2	Analog Input Change Event - 16-bit without time			*(Unsol. Resp.)*	17, 28 *(index)*

32	3	Analog Input Change Event - 32-bit with time	1*(read)*	06 *(no range, or all)*, 07, 08 *(limited qty)*	*(Response)*	17, 28 *(index)*
32	3	Analog Input Change Event - 32-bit with time			*(Unsol. Resp.)*	17, 28 *(index)*
32	4	Analog Input Change Event - 16-bit with time	1*(read)*	06 *(no range, or all)*, 07, 08 *(limited qty)*	*(Response)*	17, 28 *(index)*
32	4	Analog Input Change Event - 16-bit with time			*(Unsol. Resp.)*	17, 28 *(index)*
32	5	Analog Input Change Event - single-precision, floating-point without time	1*(read)*	06 *(no range, or all)*, 07, 08 *(limited qty)*	*(Response)*	17, 28 *(index)*
32	5	Analog Input Change Event - single-precision, floating-point without time			*(Unsol. Resp.)*	17, 28 *(index)*
32	7	Analog Input Change Event - single-precision, floating-point with time	1*(read)*	06 *(no range, or all)*, 07, 08 *(limited qty)*	*(Response)*	17, 28 *(index)*
32	7	Analog Input Change Event - single-precision, floating-point with time			*(Unsol. Resp.)*	17, 28 *(index)*
34	0	Analog Input Deadband - any variation	1*(read)*	00, 01 *(start-stop)*, 06 *(no range, or all)*		
34	1	Analog Input Deadband - 16-bit	1*(read)*	00, 01 *(start-stop)*, 06 *(no range, or all)*	*(Response)*	00, 01 *(start-stop)*
34	1		2*(write)*			

		Analog Input Deadband - 16-bit		00, 01 *(start-stop)*, 06 *(no range, or all)*		
34	2	Analog Input Deadband - 32-bit	1*(read)*	00, 01 *(start-stop)*, 06 *(no range, or all)*	*(Response)*	00, 01 *(start-stop)*
34	2	Analog Input Deadband - 32-bit	2*(write)*	00, 01 *(start-stop)*, 06 *(no range, or all)*		
34	3	Analog Input Deadband - single-precision floating point	1*(read)*	00, 01 *(start-stop)*, 06 *(no range, or all)*	*(Response)*	00, 01 *(start-stop)*
34	3	Analog Input Deadband - single-precision floating point	2*(write)*	00, 01 *(start-stop)*, 06 *(no range, or all)*		
40	0	Analog Output Status - any variation	1*(read)*	00, 01 *(start-stop)*, 06 *(no range, or all)*		
40	0	Analog Output Status - any variation	22*(assign class)*	00, 01 *(start-stop)*, 06 *(no range, or all)*		
40	1	Analog Output Status - 32-bit with flag	1*(read)*	00, 01 *(start-stop)*, 06 *(no range, or all)*	*(Response)*	00, 01 *(start-stop)*
40	2	Analog Output Status - 16-bit with flag	1*(read)*	00, 01 *(start-*	*(Response)*	00, 01 *(start-stop)*

				stop), 06 *(no range, or all)*		
40	3	Analog Output Status - single-precision, floating-point with flag	1*(read)*	00, 01 *(start-stop)*, 06 *(no range, or all)*	*(Response)*	00, 01 *(start-stop)*
41	0	Analog Output Block - any variation	22*(assign class)*	00, 01 *(start-stop)*, 06 *(no range, or all)*		
41	1	Analog Output Block - 32-bit	3*(select)*	17, 28 *(index)*	*(Response)*	echo of request
41	1	Analog Output Block - 32-bit	4*(operate)*	17, 28 *(index)*	*(Response)*	echo of request
41	1	Analog Output Block - 32-bit	5*(direct op.)*	17, 28 *(index)*	*(Response)*	echo of request
41	1	Analog Output Block - 32-bit	6*(direct op, no ack)*	17, 28 *(index)*	*(Response)*	echo of request
41	2	Analog Output Block - 16-bit	3*(select)*	17, 28 *(index)*	*(Response)*	echo of request
41	2	Analog Output Block - 16-bit	4*(operate)*	17, 28 *(index)*	*(Response)*	echo of request
41	2	Analog Output Block - 16-bit	5*(direct op.)*	17, 28 *(index)*	*(Response)*	echo of request
41	2	Analog Output Block - 16-bit	6*(direct op, no ack)*	17, 28 *(index)*	*(Response)*	echo of request
41	3	Analog Output Block - single-precision, floating-point	3*(select)*	17, 28 *(index)*	*(Response)*	echo of request
41	3	Analog Output Block - single-precision, floating-point	4*(operate)*	17, 28 *(index)*	*(Response)*	echo of request
41	3	Analog Output Block - single-precision, floating-point	5*(direct op.)*	17, 28 *(index)*	*(Response)*	echo of request
41	3	Analog Output Block - single-precision, floating-point	6*(direct op, no ack)*	17, 28 *(index)*	*(Response)*	echo of request
42	0		1*(read)*			

		Analog Output Event - any variation		06 *(no range, or all)*, 07, 08 *(limited qty)*		
42	1	Analog Output Event - 32-bit without time	1 *(read)*	06 *(no range, or all)*, 07, 08 *(limited qty)*	*(Response)*	17, 28 *(index)*
42	1	Analog Output Event - 32-bit without time			*(Unsol. Resp.)*	17, 28 *(index)*
42	2	Analog Output Event - 16-bit without time	1 *(read)*	06 *(no range, or all)*, 07, 08 *(limited qty)*	*(Response)*	17, 28 *(index)*
42	2	Analog Output Event - 16-bit without time			*(Unsol. Resp.)*	17, 28 *(index)*
42	3	Analog Output Event - 32-bit with time	1 *(read)*	06 *(no range, or all)*, 07, 08 *(limited qty)*	*(Response)*	17, 28 *(index)*
42	3	Analog Output Event - 32-bit with time			*(Unsol. Resp.)*	17, 28 *(index)*
42	4	Analog Output Event - 16-bit with time	1 *(read)*	06 *(no range, or all)*, 07, 08 *(limited qty)*	*(Response)*	17, 28 *(index)*
42	4	Analog Output Event - 16-bit with time			*(Unsol. Resp.)*	17, 28 *(index)*
42	5	Analog Output Event - single-precision floating point without time	1 *(read)*	06 *(no range, or all)*, 07, 08 *(limited qty)*	*(Response)*	17, 28 *(index)*
42	5	Analog Output Event - single-precision floating point without time			*(Unsol. Resp.)*	17, 28 *(index)*
42	7		1 *(read)*		*(Response)*	

		Analog Output Event - single-precision floating point with time		06 *(no range, or all)*, 07, 08 *(limited qty)*		17, 28 *(index)*
42	7	Analog Output Event - single-precision floating point with time			*(Unsol. Resp.)*	17, 28 *(index)*
43	0	Analog Output Command Event - any variation	1*(read)*	06 *(no range, or all)*, 07, 08 *(limited qty)*		
43	1	Analog Output Command Event - 32-bit without time	1*(read)*	06 *(no range, or all)*, 07, 08 *(limited qty)*	*(Response)*	17, 28 *(index)*
43	1	Analog Output Command Event - 32-bit without time			*(Unsol. Resp.)*	17, 28 *(index)*
43	2	Analog Output Command Event - 16-bit without time	1*(read)*	06 *(no range, or all)*, 07, 08 *(limited qty)*	*(Response)*	17, 28 *(index)*
43	2	Analog Output Command Event - 16-bit without time			*(Unsol. Resp.)*	17, 28 *(index)*
43	3	Analog Output Command Event - 32-bit with time	1*(read)*	06 *(no range, or all)*, 07, 08 *(limited qty)*	*(Response)*	17, 28 *(index)*
43	3	Analog Output Command Event - 32-bit with time			*(Unsol. Resp.)*	17, 28 *(index)*
43	4	Analog Output Command Event - 16-bit with time	1*(read)*	06 *(no range, or all)*, 07, 08 *(limited qty)*	*(Response)*	17, 28 *(index)*

43	4	Analog Output Command Event - 16-bit with time			*(Unsol. Resp.)*	17, 28 *(index)*
43	5	Analog Output Command Event - single-precision floating point without time	1*(read)*	06 *(no range, or all)*, 07, 08 *(limited qty)*	*(Response)*	17, 28 *(index)*
43	5	Analog Output Command Event - single-precision floating point without time			*(Unsol. Resp.)*	17, 28 *(index)*
43	7	Analog Output Command Event - single-precision floating point with time	1*(read)*	06 *(no range, or all)*, 07, 08 *(limited qty)*	*(Response)*	17, 28 *(index)*
43	7	Analog Output Command Event - single-precision floating point with time			*(Unsol. Resp.)*	17, 28 *(index)*
50	1	Time and Date - absolute time	1*(read)*	07 *(limited qty = 1)*	*(Response)*	07 *(limited qty = 1)*
50	1	Time and Date - absolute time	2*(write)*	07 *(limited qty = 1)*		
50	3	Time and Date - absolute time at last recorded time	2*(write)*	07 *(limited qty = 1)*		
51	1	Time and Date CTO - absolute time, synchronised			*(Response)*	07 *(limited qty = 1)*
51	1	Time and Date CTO - absolute time, synchronised			*(Unsol. Resp.)*	07 *(limited qty = 1)*
51	2	Time and Date CTO - absolute time, unsynchronised			*(Response)*	07 *(limited qty = 1)*
51	2	Time and Date CTO - absolute time, unsynchronised			*(Unsol. Resp.)*	07 *(limited qty = 1)*
52	1	Time Delay - coarse			*(Response)*	07 *(limited qty = 1)*
52	2	Time Delay - fine			*(Response)*	

						07 *(limited qty = 1)*
60	1	Class Objects - class 0 data	1*(read)*	06 *(no range, or all)*		
60	1	Class Objects - class 0 data	22*(assign class)*	06 *(no range, or all)*		
60	2	Class Objects - class 1 data	1*(read)*	06 *(no range, or all)*, 07, 08 *(limited qty)*		
60	2	Class Objects - class 1 data	20*(enable unsol.)*	06 *(no range, or all)*		
60	2	Class Objects - class 1 data	21*(disable unsol.)*	06 *(no range, or all)*		
60	2	Class Objects - class 1 data	22*(assign class)*	06 *(no range, or all)*		
60	3	Class Objects - class 2 data	1*(read)*	06 *(no range, or all)*, 07, 08 *(limited qty)*		
60	3	Class Objects - class 2 data	20*(enable unsol.)*	06 *(no range, or all)*		
60	3	Class Objects - class 2 data	21*(disable unsol.)*	06 *(no range, or all)*		
60	3	Class Objects - class 2 data	22*(assign class)*	06 *(no range, or all)*		
60	4	Class Objects - class 3 data	1*(read)*	06 *(no range, or all)*, 07, 08 *(limited qty)*		
60	4	Class Objects - class 3 data	20*(enable unsol.)*	06 *(no range, or all)*		
60	4	Class Objects - class 3 data	21*(disable unsol.)*			

				06 *(no range, or all)*		
60	4	Class Objects - class 3 data	22*(assign class)*	06 *(no range, or all)*		
70	2	File - Authentication (Not Supported)	29 *(authenticate file)*	5B *(Cnt = 1)*	*(Response)*	5B *(Cnt = 1)*
70	3	File - Command	25*(open file)*	5B *(Cnt = 1)*		
70	3	File - Command	27*(delete file)*	5B *(Cnt = 1)*		
70	4	File - Command Status	26*(close file)*	5B *(Cnt = 1)*	*(Response)*	5B *(Cnt = 1)*
70	4	File - Command Status	30*(abort file)*	5B *(Cnt = 1)*	*(Response)*	5B *(Cnt = 1)*
70	5	File - Transport	1*(read)*	5B *(Cnt = 1)*	*(Response)*	5B *(Cnt = 1)*
70	5	File - Transport	2*(write)*	5B *(Cnt = 1)*	*(Response)*	5B *(Cnt = 1)*
70	6	File - Transport Status			*(Response)*	5B *(Cnt = 1)*
70	7	File - Descriptor	28*(get file info)*	5B *(Cnt = 1)*	*(Response)*	5B *(Cnt = 1)*
80	1	Internal Indications - packed format	1*(read)*	00, 01 *(start-stop)*	*(Response)*	00 *(start-stop)*
80	1	Internal Indications - clear IIN1.4 - NEED_TIME	2*(write)*	00 *(start-stop) (Index=4)*		
80	1	Internal Indications - clear IIN1.7 - DEVICE_RESTART	2*(write)*	00 *(start-stop) (Index=7)*		
91	1	Status of Requested Operation - Activate configuration			*(Response)*	5B
110	string length	Octet String	1*(read)*	00, 01 *(start-stop)*		
110	string length	Octet String	2*(write)*	00, 01 *(start-stop)*		
110	string length	Octet String	31*(activate config)*	5B		
112	string length	Virtual Terminal - Output Block	2*(write)*	00, 17 *(index)*		

113	string length	Virtual Terminal - Event Data	1*(read)*	00, 17 *(index)*	*(Response)*	17 *(index)*
120	1	Authentication Challenge	32*(auth req)*	5B	*(Auth. Resp.)*	5B
120	2	Authentication Reply	32*(auth req)*	5B	*(Auth. Resp.)*	5B
120	3	Authentication Aggresive Mode Request	any of 1 to 31	07 *(limited qty = 1)*	*(Response)*	07 *(limited qty = 1)*
120	3	Authentication Aggresive Mode Request			*(Unsol. Resp.)*	07 *(limited qty = 1)*
120	4	Session Key Status Request	32*(auth req)*	07 *(limited qty = 1)*		
120	5	Session Key Status			*(Auth. Resp.)*	5B
120	6	Session Key Change	32*(auth req)*	5B		
120	7	Authentication Error	33*(auth req, no ack)*	5B	*(Auth. Resp.)*	5B
120	9	Hashed Message Authentication Code (HMAC)	any of 1 to 31	5B	*(Response)*	5B
120	9	Hashed Message Authentication Code (HMAC)			*(Unsol. Resp.)*	5B
No object (function code only)			0*(confirm)*			
No object (function code only)			13*(cold restart)*			
No object (function code only)			14*(warm restart)*			
No object (function code only)			23*(delay meas.)*			
No object (function code only)			24*(record current time)*			

5 Data Points List (outstation only)

This part of the Device Profile shows, for each data type, a table defining the data points available in the device or a description of how this information can be obtained if the database is configurable.

5.1 Definition of Binary Input Point List: *List of addressable points. Points that do not exist (for example, because an option is not installed) are omitted from the table.* *Note: the number of binary inputs present in the device, and the maximum binary input index, are available remotely using object Group 0 Variations 239 and 238.*	☐ Fixed, list shown in table below ☑ Configurable (current list may be shown in table below) ☐Other, explain:

Binary Input points list:

Point Index	Name	Event Class Assigned (1, 2, 3 or none)	Name for State when value is 0	Name for State when value is 1	Description
0	Binary Input 0	1	off	on	Example Configurable Binary Input Point

5.2 Definition of Double-bit Input Point List: *List of addressable points. Points that do not exist (for example, because an option is not installed) are omitted from the table.* *Note: the number of double-bit inputs present in the device, and the maximum double-bit input index, are available remotely using object Group 0 Variations 236 and 235.*	☐ Fixed, list shown in table below ☐ Configurable (current list may be shown in table below) ☐Other, explain:

This section is not included in this Profile.

5.3 Definition of Binary Output Status / Control Relay Output Block Points List:	☐ Fixed, list shown in table below ☑ Configurable (current list may be shown in table below)

List of addressable points. Points that do not exist (for example, because an option is not installed) are omitted from the table. *Note: the number of binary outputs present in the device, and the maximum binary output index, are available remotely using object Group 0 Variations 224 and 223.*	☐Other, explain: Note: Pulse On-Trip/Close controls support Activation (two point) model only

Binary Output Status and CROB points list:

		Supported Control Operations															
															Event Class Assigned (1,2,3 or none)		
Point Index	Name	Select/Operate	Direct Operate	Direct Operate - No Ack	Pulse On	Pulse Off	Latch On	Latch Off	Trip	Close	Count > 1	Cancel Currently Running Operation	Name for State when value is 0	Name for State when value is 1	Change	Command	Description
0	Binary Output 0	Y	Y	Y	Y	Y	Y	Y	Y	Y	Y	Y	off	on	2		Example Configurable Binary Output Point

5.4 Definition of Counter / Frozen Counter Point List: *List of addressable points. Points that do not exist (for example, because an option is not installed) are omitted from the table.* *Note: the number of counters present in the device, and the maximum counter index, are available remotely using object Group 0 Variations 229 and 228.*	☐ Fixed, list shown in table below ☑ Configurable (current list may be shown in table below) ☐Other, explain:

Counter / Frozen Counter points list:

Point Index	Name	Event Class Assigned to Counter Events (1, 2, 3 or none)	Frozen Counter Exists (Yes or No)	Event Class Assigned to Frozen Counter Events (1, 2, 3 or none)	Description
29	Counter Input 29	2	N		Example Counter Input point configurable for 16-bit or 32-bit variation

5.5 Definition of Analog Input Point List: *List of addressable points. Points that do not exist (for example, because an option is not installed) are omitted from the table.* *Note: the number of analog inputs present in the device, and the maximum analog input index, are available remotely using object Group 0 Variations 233 and 232.*	☐ Fixed, list shown in table below ☑ Configurable (current list may be shown in table below) ☐Other, explain: Note: All points can be selected for 16-bit, 32-bit or Short Float variation

Analog Input points list:

.				Transmitted Value		Scaling				.
Point Index	Name	Event Class Assig	Frozen Analog Ex	Event Class Assig	Min int / flt	Max int / flt	Multiplier	Offset	Units	Resolution	Description

0	Analog Input 0	1			-32768	+32767					Example Analog Input point configured for 16-bit integer variation
1	Analog Input 1	3			-2147483648	+2147483647					Example Analog Input point configired for 32-bit integer variation
2	Analog Input 2	none			-3.402823e+38	+3.402823e+38					Example Analog Input point configured for single precision floating point variation

5.6 Definition of Analog Output Status / Analog Output Block Point List: *List of addressable points. Points that do not exist (for example, because an option is not installed) are omitted from the table.* *Note: the number of analog outputs present in the device, and the maximum analog output index, are available remotely using object Group 0 Variations 221 and 220.*	☐ Fixed, list shown in table below ☑ Configurable (current list may be shown in table below) ☐ Other, explain: Note: All points can be selected for 16-bit, 32-bit or Short Float variation

Analog Output points list:

.		Supported Control Operations			Transmitted Value		Scaling		.		Event Class Assigned (1, 2, 3 or none)		.
Point Index	Name	Select/Operate	Direct Operate	Direct Operate - No Ack	Min	Max	Min	Max	Units	Resolution	Change	Command	Description
0	Analog Output 0	Y	Y	Y	-32768	+32767					2		Example Analog Output point configured for 16-bit integer variation
1	Analog Output 1	Y	Y	Y	-2147483648	+2147483647					3		Example Analog Output point configured for 32-bit integer variation
2	Analog Output 2	Y	Y	Y	-3.402823e+38	+3.402823e+38					none		Example Analog Output point configured

													for single precision floating point variation

5.7 Definition of File Names that may be read or written:	☑ Fixed, list shown in table below ☑ Configurable (current list may be shown in table below) ☐ Other, explain:

Sequential Files list:

.		Authentication Required for:			.
File Name	Event Class Assigned (1, 2, 3 or none)	Read	Write	Delete	Description
/	none				This is the main directory
DEVICEDIAG.LOG	none				Diagnostic stream captured to file. Use FILEDIAG command to start/stop diagnostic stream capture
CONFIG.LOG	none				Configuration log file from procesing of the most recently loaded configuration
SEC.LOG	none				Security log file from procesing of the most recently loaded security configuration
SCADAPackInfo.TXT	none				Device information file showing system status for diagnostics
*.RTZ	none				Full Configuration + logic loaded into outstation
*.BIZ	none				System Firmware file
*.BLZ	none				Bootloader Firmware file
*.BIN	none				I/O module Firmware file
SYS_*	none				Reserved system file names
/Logic	none				This is a directory containing SCADAPack x70 Logic files - DO NOT DELETE
/Logic/TEST.LOG	none				Logic operational log file

5.8 Definition of Octet String and Extended Octet String Point List: *List of addressable points. Points that do not exist (for example, because an option is not installed) are omitted from the table.*	☐ Fixed, list shown in table below ☐ Configurable (current list may be shown in table below) ☐Other, explain:

Octet String and Extended Octet String points list:

Point Index	Name	Event Class Assigned (1, 2, 3 or none)	Group Number used to transport the object	Description

5.9 Definition of Virtual Terminal Port Numbers: *List of addressable points. Points that do not exist (for example, because an option is not installed) are omitted from the table.*	☑ Fixed, list shown in table below ☐ Configurable (current list may be shown in table below) ☐Other, explain:

Ports list:

Virtual Port Number (Point Index)	Name	Event Class Assigned (1, 2, 3 or none)	Description
20	Command Line	none	Remote command line interface

5.10 Definition of Data Set Prototypes: *List of all data set prototypes. The following table is repeated for each Data Set Prototype defined.* *Note: the number of data set prototypes known to the device are available remotely*	☐ Fixed, list shown in table below ☐ Configurable (current list may be shown in table below) ☐Other, explain:

using object Group 0 Variations 212 and 213.	

This section is not included in this Profile.

5.11 Definition of Data Set Descriptors: *List of all data set descriptors. The following table is repeated for each Data Set Descriptor defined.* *Note: the number of data sets known to the device are available remotely using object Group 0 Variations 214 and 215.*	☐ Fixed, list shown in table below ☐ Configurable (current list may be shown in table below) ☐Other, explain:

This section is not included in this Profile.

5.12 Data Set Descriptors - Point Index Attributes *The following table is optional and correlates data set elements to point indexes of standard DNP3 Data Objects. The element number below refers to the position in the present value object (object 87) or event (object 88) data set and will not match the element number in the data set descriptor or data set prototype tables above.*

This section is not included in this Profile.

---------- End of Device Profile for Reference Device ----------

---------- End of Complete Device Profile ----------